WindObserver™65

User Manual

Ultrasonic Anemometer

(Parts 1390-65-X-XXX)

Doc No: 1390-PS-0039

Issue 7 (Applies to firmware 2387 6.04 onwards).

Gill Instruments Limited
Saltmarsh Park, 67 Gosport Street, Lymington,
Hampshire, SO41 9EG, UK
Tel: +44 1590 613500, Fax: +44 1590 613555
Email: anem@gillinstruments.com Website: www.gillinstruments.com

Contents

1. FOREWORD 5
2. INTRODUCTION 5
3. FAST TRACK SET-UP 5
4. SPECIFICATION 6
5. PRE-INSTALLATION 7
5.1. Equipment supplied 7
5.1.1 WindObserver 65 Part Numbers. 7
5.2. Packaging 7
5.3. Installation requirements 8
5.4. Connector and Cable Assembly. 9
6. INSTALLATION 11
6.1. Installation Guidelines 11
6.2. Bench system test 12
6.3. Cabling 12
6.4. Power supplies 13
6.5. Connections 13
Earthing or grounding 13
Default Settings 15
Connecting to a PC with a RS422 or RS485 input 15
Networking units 16
6.6. Indoor Power and Communications Interface (Part 1189-PK-021) 17
PCI Connector Pin and Cable assignments 18
Anemometer connector – 15 way 18
Auxiliary Analogue Outputs – 9 way Plug 18
DC Supply – 4 way 18
RS 232 Output – 9 way Skt 19
RS422 Network In – 9 way Skt 19
RS422 Network Out – 9 way Plg 19
6.7. Analogue Connections 20
Analogue Voltage Output Connections (5v or ± 2.5v) 20
Analogue Connections for 4-20mA output 20
6.8. Using the WindObserver 65 with WindDisplays 21
Marine WindDisplay 21
Meteorological WindDisplay 23
6.9. Mechanical installation 25
Location 25
Orientation 25
Mounting bracket (Short and Long Mounts) 25
Pipe Mounting (use with Pipe Mount) 27
Custom Mount (Use with WindObserver No Mount Option) 27
Alignment 28
Figure 2a North Marker (Long Base Mount shown for illustrative purposes). 28
Figure 2b WindObserver 65 outline dimensions 29
7. MESSAGE FORMATS & OPTIONS 31
7.1. Wind Speed format 31
7.2. Output formats 31
Low wind speeds 31
7.3. Networking 32
7.4. Units 33

7.5. Output rate 33
Sample Average 33
7.6. Averaging (Digital Data) 33
7.6.1 G Command Averaging. 33
7.6.2 Modes 14 and 15 Road Weather Averaging (RWA) 34
7.7. Options 37
Speed of Sound (SOS) and Temperature 37
Heating (If fitted) 37
45° Offset 37
Vertical Output Padding 37
7.8. ASCII message format (UV, Polar and Tunnel) 38
ASCII UV format 38
ASCII Polar format 39
ASCII Polled (UV and Polar) 39
ASCII format – Tunnel Mode 40
7.9. Binary message format (UV, Polar and Tunnel) 41
Binary UV format 41
Binary Polar format 41
Binary Tunnel format 42
7.10. NMEA Format 43
7.11. Averaging Format (Modes 14 and 15) 44
7.12. Analogue outputs and options 45
Output modes 45
Channel outputs 45
Status 45
Temperature 45
Tunnel mode 45
Scaling 45
Averaging 45
Polar mode direction wraparound 46
Low wind speeds 46
Cables. 46
8. CONFIGURING 47
8.1. Configuring using HyperTerminal 47
8.2. Entering Configuration mode 47
8.3. Returning to Measurement mode 47
8.4. Checking the configuration 48
8.5. Changing settings 48
8.6. Configuration Settings 49
Ax - Speed of Sound (SOS) and Temperature 49
Bx - Baud Rate 49
Cx- Analogue Output Polar Mode Direction Wraparound 49
Dx- Diagnostic and Configuration Command (see also Section 10.6) 49
Ex - Full Duplex/Half Duplex Mode 50
Fx- Data and Parity Options 50
Gx to Gxxxx - Averaging (Digital Outputs only) 50
Hx - Heating (If fitted) 50
Jx - Analogue Power-up Tests 51
Kx – NMEA Settings 51
Lx - ASCII Message Terminator 51
Mx to Mxx - Message Format 51
Nx – Unit Identifier Address 51
Ox – ASCII Output Format (Output String Padding) 52
Px - Output Rate 52
Q- Measurement Mode 52
Tx - Analogue Output Voltage or Current settings (if fitted) 52

Ux – Digital Output Units 52
Vx- Vertical Output Padding 53
Xx - 45° Alignment Offset/Inverted Operation 53
Yx – Analogue Output, Channel 3 (if fitted). 53
Zx – Analogue Output Scaling (if analogue outputs fitted). 53
9. VIEW AND LOG DATA WITH WINDVIEW SOFTWARE 54
9.1. Introduction 54
9.2. Connect to an Instrument using Gill WindView Software 54
9.3. WindSock Function 56
9.4. Logging Data. 57
10. MAINTENANCE & FAULT-FINDING 60
10.1. Cleaning and Handling 60
10.2. Servicing 60
10.3. Fault-finding 60
10.4. Safe Mode 61
10.5. Status (error) codes 62
10.6. Bench Test 62
Use of an Integrity Check Chamber (Optional item) 63
10.7. Returning Units 63
11. APPENDICES 64
11.1. Glossary & Abbreviations 64
11.2. Guarantee 65
11.3. FCC 66
11.4. Principle of operation 67

1. FOREWORD

Thank you for purchasing the WindObserver 65 manufactured by Gill Instruments Ltd. The unit has no customer serviceable parts and requires no calibration or maintenance. To achieve optimum performance we recommend that you read the whole of this manual before proceeding with use. Do **NOT** remove black "rubber" transducer caps.

Gill products are in continuous development and therefore specifications may be subject to change and design improvements without prior notice.

The information contained in this manual remains the property of Gill Instruments and should not be copied or reproduced for commercial gain.

2. INTRODUCTION

The Gill WindObserver 65 wind sensor is a very robust unit with no moving parts, outputting wind speed and direction. The units of wind speed, output rate and formats are all user selectable.

The WindObserver 65 is available with or without de-icing heating (recommended if icing is likely), and with or without analogue outputs.

The WindObserver 65 can be used in conjunction with a PC, data logger or other device, provided it is compatible with the RS422 output or the analogue outputs. Multiple units can be networked if required.

Alternatively, the WindObserver 65 is designed to connect directly to the Gill WindDisplay unit to provide a complete wind speed direction system.

The output message format can be configured in Polar, UV (2-axis), NMEA (0183 Version 3), Tunnel formats, and as either a Continuous output or Polled (requested by host system), detailed in full in Section 8 Message Formats & Options.

3. FAST TRACK SET-UP

If you are in a hurry to try out the WindObserver 65, are familiar with Gill equipment, and coupling to a PC using RS422, go to the following sections:

Section 6 Installation

Section 7 Message Formats & Options

Section 8 Configuring

After you have successfully set up the WindObserver 65, we strongly advise that you then go back and read the rest of the manual to ensure that you get the best results from the WindObserver 65.

4. SPECIFICATION

Measurement		
Output	1, 2, 4, 5, 8, 10Hz	
Parameters	UV, Polar, NMEA, Tunnel	
Units	m/s, Knots, MPH, KPH ft/min	
Averaging	Flexible 1-3600 seconds or Adjustable Averaging for Road Weather applications	
Wind Speed		
Range	0 - 65m/s (0-145mph)	
Accuracy	±2%@12m/s	
Resolution	0.01m/s	
Offset	±0.01m/s	
Direction		
Range	0 - 359°	
Accuracy	± 2°	
Resolution	1°	
Sonic Temperature Output		
Range	-40°C to + 70°C	
Anemometer Status	Supplied as part of standard message	
Starting Threshold	0.01 m/s	
Dead Band Wind Direction	None	
Power Requirement		
Anemometer only	9-30V DC (30mA @ 12V DC, non-analogue unit) 9-30V DC (50mA @12V DC, analogue unit) Reverse voltage protected	
Heating - Optional	Allow 3A @ 22v to 30v (max) AC rms or DC	
Digital Output		
Communication	RS422, full duplex, RS485 2 wire network facility	
Baud rates	1200, 2400, 4800, 9600, 19200, 38400	
Formats	8 data bits, odd, even or no parity, 1 stop bit	
Analogue Output - Optional		
Quantity	3 (speed, direction, status, SOS or Sonic Temperature)	
Scale	Multiples of ± 10m/s up to ± 70m/s	
Type	± 2.5V, 0-5V or 4-20mA	
V output resistance	60 Ohms	
4-20mA loading	10-300 Ohms	
Dimensions		
Size	See manual Fig 2b for dimensions	
Weight	WindObserver 65	1.34kg (no mount or lead).
	Base Mount Short	0.63kg.
	Base Mount Long	1.05kg.
	Pipe Mount	1.06kg.
Materials		
External Construction	Stainless Steel 316	
Environmental		
Moisture protection	IP66 (NEMA4X)	
Operating temperature	-55°C to +70°C (heated version)	
Humidity	0% to 100% RH	
Precipitation	300mm/hr	
EMC	EN 61326-1:2006 EN 60945:2002 FCC CFR47 Parts 15.109 Class A	
Icing	MILSTD810F Method 521.1 Procedure 1	
Standards	Traceable to UK national standards Lloyds Register Type Approved	
Site Calibration	None required. (See Section 10.6 Zero Wind Check)	

5. PRE-INSTALLATION

5.1. Equipment supplied

WindObserver 65.

and Installation kit, 1390-10-163 (see para 5.4).

5.1.1 WindObserver 65 Part Numbers.

Available parts are as detailed below:-

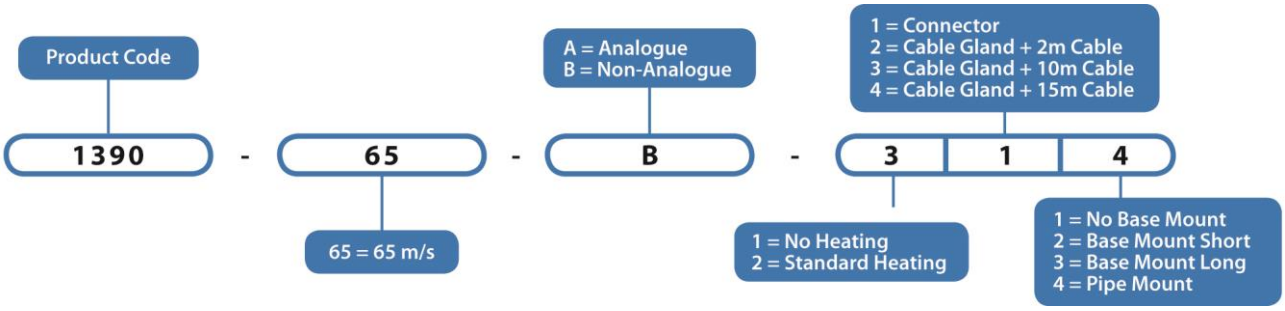

Optional Extras:

Item	Part Number
Cable 3 Pair twisted and Shielded wires, 24awg, per metre.	026-02660
Cable 4 Pair twisted and Shielded wires, 24awg, per metre.	026-03156
Cable 9 Pair twisted and Shielded wires, 22awg, per metre.	026-02663
Integrity Check Chamber	1277-00-052
19 way Connector kit	1390-10-163
Base Mount Short	1390-30-154
Base Mount Long	1390-30-155
Pipe Mount	1390-30-156

5.2. Packaging

Whilst the WindObserver 65 is being moved to its installation site, the unit should be kept in its packaging. Retain the packaging for use if the unit has to be moved or returned to Gill Instruments.

5.3. Installation requirements

Host system - One of the following:

- PC with an internal or external interface compatible with the RS422 output from the WindObserver 65.
- Gill WindDisplay.
- Other equipment with I/O compatibility to the WindObserver 65 option selected.

  For example if the unit has Analogue outputs, a Data Logger, Chart Recorder, or PC fitted with an ADC card.
- Networking - Multiple WindObserver 65 units can be networked

Software - One of the following:

- Gill Wind Software used as a Terminal program only (Wizard and Sync Comms not applicable). Wind will run on PC's up to and including Windows 10 and can be downloaded free from:- http://www.gillinstruments.com/main/software.html
- HyperTerminal (supplied with Windows™ 9x to XP).
- Other Terminal Emulation software packages

Cable and Junctions Box

To connect between the WindObserver 65 and the host system. The unit is supplied with a base mounted connector system or flying cable options (requiring a mast mounted junction box (not provided)) for onward connection.

If using a flying cable option it must be retained with a cable tie within 150mm of the base of the anemometer.

Mounting Bracket

The WindObserver 65 can be supplied with a short or long base mount to use with a mounting bracket (not provided). The WindObserver 65 can be attached to the bracket via the four tapped holes in the base mount fitted to the unit. The gasket supplied can be fitted between the sensor and its mounting bracket when it is important to minimise the effects of corrosion should two dissimilar metals be used.

In the event that the mounting bracket supplied by the customer is not flat or does not form complete support for the anemometer base; the customer must fit a mounting ring as shown in Figure 2.

Mounting Pole

The WindObserver 65 can be supplied with a pole mount that provides the option to attach to a pole with or without a thread (pole not provided). The WindObserver 65 can be retained to the pole via the three tapped holes in the pole mount fitted to the unit.

5.4. Connector and Cable Assembly.

The WindObserver 65 variant with a connector base is supplied with a mating 19 way connector.

Open the pack of connector parts supplied (Gill Part 1390-10-163).

A set of assembly instructions are supplied with the connector together with:-.

Table of Equivalent Part Numbers		
Part Name	**Gill Part No.**	**Cannon Trident Part No.**
Connector head, 19 way	020-04464	192993-0054
Metal backshell (7 pieces)	020-04465	192993-0084
Solder bucket contacts (5 per pack, (4 –off packs))	020-04469	192900-0635

Arrange Backshell (Gill Part Number 020-04465).

Pass parts 1-6 along the cable as per the diagram below.

(Note that the connector supplies the correct strain relief for cables with an outside diameter of 7.9 to 12.6mm).

Part 7 Part 6 Part 5 Part 4 Part 3 Part 2 Part 1

Prepare Cable (e.g. Gill Part 026-02663).

Trim back the cable outer and twisted pair screen sleeves 40mm (see diagram below).

Trim back the screen drain wires to a length of 24mm.

Strip back the connection wires by 7.1mm and tin solder.

Solder the wires to the bucket contacts (will take 14awg to 26awg wire).

Unused wires should be cut back and insulated.

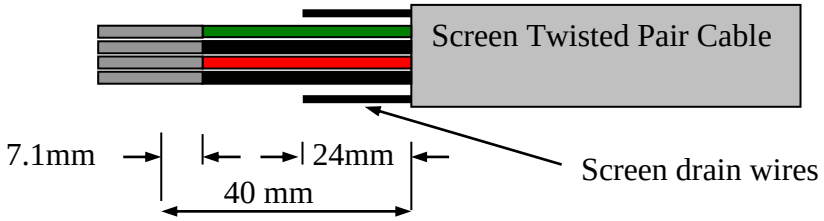

Prepare Connector Head (Gill Part 020-04464).

Remove the connector thread protector and place the O-ring (part 7) into the groove of the connector head (020-04464).

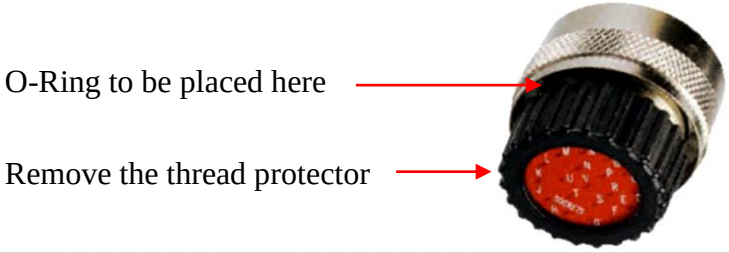

Assemble Connector to the Cable.

Referring to Page 9 and Page 14 push connector contacts through the red connector head seal into the appropriate location, when in place there should be a click as the contact locks into position.

Once contacts are in position pass part 6 up the cable and into position as shown below.

Note: if a connector pin needs removing use Cannon Extraction Tool, Manufacturer's Part 192922-1450.

Fold and spread screen wires over part 6 and then push up part 5 as shown to clamp screen wires between Parts 5 and 6.

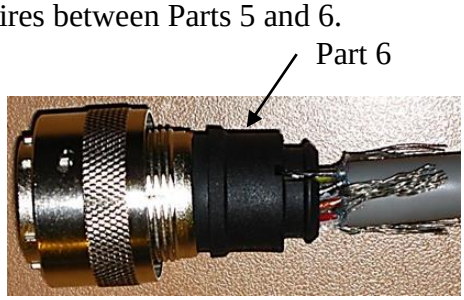

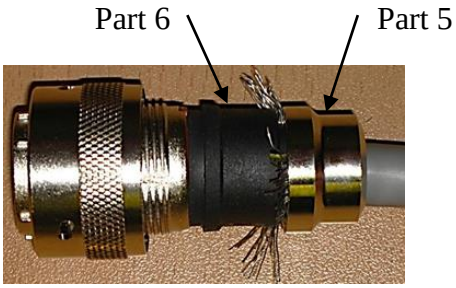

Now screw in part 4 and torque up to a value of 10Nm.

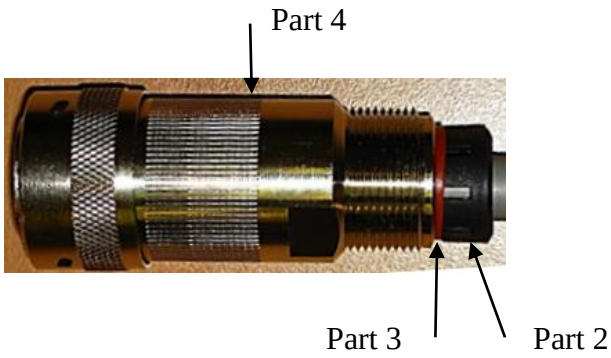

Pass parts 3 and 2, the cable seal and cable grip from the connector kit, along the cable to the housing.

Now screw in item 1, the clamp nut, over parts 2 and 3 and onto the housing and torque up to a value of 10Nm.

6. INSTALLATION

Do NOT remove the black "rubber" transducer caps. Warranty is void if the Green security seal is damaged or removed.

Take care not to knock the four Transducer arms. All the time the WindObserver 65 is not in its final location, it should be protected from damage by keeping it in the original packaging as long as possible, treating it as a delicate instrument.

If an Intrinsically Safe (IS) device is required, the I.S. WindObserver must be used - the WindObserver 65 is NOT an IS device.

Warranty is void if the unit case is removed.

6.1. Installation Guidelines

The WindObserver 65 has been designed to meet and exceed the stringent standards listed in its specification. Operating in diverse environments all over the world, WindObserver 65 requires no calibration or adjustment whatsoever.

As with any sophisticated electronics, good engineering practice should be followed to ensure correct operation.

- Always check the installation to ensure the WindObserver 65 is not affected by other equipment operating locally, which may not conform to current standards, e.g. radio/radar transmitters, boat engines, generators etc.

  Guidelines –

  - Avoid mounting in the plane of any radar scanner – a vertical separation of at least 2m should be achieved.
  - Radio transmitting antennas, the following minimum separations (all round) are suggested
    - VHF IMM – 1m
    - MF/HF – 5m
    - Satcom – 5m (avoid likely lines of sight)
- Ensure the product is correctly earthed in accordance with this manual
- Use cables recommended by Gill, keeping the length below the maximum allowed (*See Section 6.3*) Where the cables are cut and re-connected (junction boxes, plugs and sockets) the cable screen integrity must be maintained, to prevent the EMC performance being compromised.
- Earth loops should not be created – earth the system in accordance with the installation guidelines. (*See Section 6.5*)
- Ensure the power supply operates to the WindObserver 65 specification at all times.

Avoid turbulence caused by surrounding structures that will affect the accuracy of the WindObserver 65 such as trees, masts and buildings. The World Meteorological Organisation makes the following recommendation:

- The standard exposure of wind instruments over level open terrain is 10m above the ground. Open terrain is defined as an area where the distance between the sensor and any obstruction is at least 10 times the height of the obstruction.

When installing the unit degrease the unit and hold with lint free gloves to reduce the build-up of deposits.

6.2. Bench system test

***Note**: Prior to physically mounting the WindObserver 65 in its final location, we strongly recommend that a bench system test be carried out to confirm the system is configured correctly, is fully functional and electrically compatible with the selected host system and cabling (preferably utilising the final cable length). The required data format, units, output rate, and other options should also all be configured at this stage. If an Integrity Check Chamber (ICC) has been purchased refer to Section 10.6.*

6.3. Cabling

Cable type

A RS422 compatible cable should be used, with the number of twisted pairs matching the application. If both the (optional) Heating and Analogue outputs are utilised, then a 9 pair cable is required.

Generic description – Twisted pairs with drain wire, screened with aluminised tape, with an overall PVC sheath. E.g. wire size 7/0.2mm (24 AWG).

The table shows some suitable manufacturers' references; other manufacture's equivalents can be used.

Table 1

No. of Pairs	Gill ref.	Belden ref.	Batt electronics ref.	Cable Gauge
2	-	9729	91071	24
3	026-02660	9730	91030	24
4	026-03156	9728	91199	24
6	-	8778	91011	22
9	026-02663	8774	91009	22

Cable length

The typical maximum length at 9600 baud is 1km (3200ft), using the recommended cable. If any problems of data corruption are experienced (due to, for example, a high local electrical 'noise' level), then a lower baud rate should be used. Alternatively, a thicker or higher specification cable can be tried. If a heated unit is used on longer cables than supplied, consideration should be given to powering the heater using lower gauge wire or paralleling wires to reduce volt drops.

Cabling and junction box

If the WindObserver 65 unit is fitted with a flying 9 pair cable attached this must be terminated in a suitable terminal box to IP66 or better, fitted with glands to prevent moisture ingress.

The cable type from the terminal box to the host system must be as specified above. If any cable is to be exposed to mechanical damage, it must be enclosed in a suitable conduit or cable tray. The cable must be securely fixed with cable clamps or equivalent at regular intervals such that the WindObserver cable gland does not support the cable weight.

The gland area at the base of the WindObserver 65 **should not** be directly exposed to moisture, as whilst the gland is sealed when mated, the anemometer is vented to air at the base to avoid pressure build up. If an IP66 rating is essential or the unit is mounted other than 'right way up' **use the gasket** provided in the mounting kit and apply additional sealing compounds around the base.

6.4. Power supplies

All WindObserver 65 units

Sensor Supply: -

Voltage	9 to 30v DC
Current	30mA Average. 50mA Max @12v dc (non-analogue unit)
Current	50mA Average, 65mA Max @ 12v dc (analogue unit 0-5v setting).

- The WindObserver 65 has reverse polarity protection.

Wind Observer Units with Heating

Heater Supply: -

Voltage	22V to 30V (max) AC RMS or DC.
Current	allow for 3A.

- **The AC Supply must be isolated from Mains Supply.**
- The heating module requires a separate power supply.
- Heater Cable length should be minimised to avoid cable volt drops and ensure maximum voltage received at the Anemometer.
- The heating (H command) is enabled as a default condition. If heating is not required enabled then the H command must be set for H1.
- Each transducer is heated independently and will be active when ambient temperature drops below approximately +15ºC each transducer will de-activate when +25ºC threshold is reached.

The WindObserver 65 has reverse polarity protection.

6.5. Connections

Important Any cable wires not used should be isolated and grounded at the terminating equipment/user end.

Do NOT connect the unit's 0V, heating –ve, analogue output 0V or digital 0V to the screen or earth.

On units with integral cable the screens of each pair are joined together inside the anemometer - these should be joined to the cable screen(s) of any further cable run. Avoid long grounding loops. Digital OV should be used in conjunction with RS422 TX RX lines in order to improve noise immunity.

Earthing or grounding

To ensure correct operation, and for maximum protection against lightning, the anemometer **MUST** be correctly earthed (grounded) via its mountings. Inadequate Earthing will degrade anemometer performance, particularly in the presence of radio frequency interference.

See Fig 1 ***Suggested mounting bracket and Earthing (grounding) arrangements***

The unit **MUST** be connected to an appropriate grounding point with a minimum of 6mm² copper wire, via the M5 base screws. The cable screens must be joined with any cable screen continuing from the unit's cable via a junction box. The primary earth for the anemometer must be provided via the base screws and not via the cable screens.

View of the WindObserver 65 base connector variant

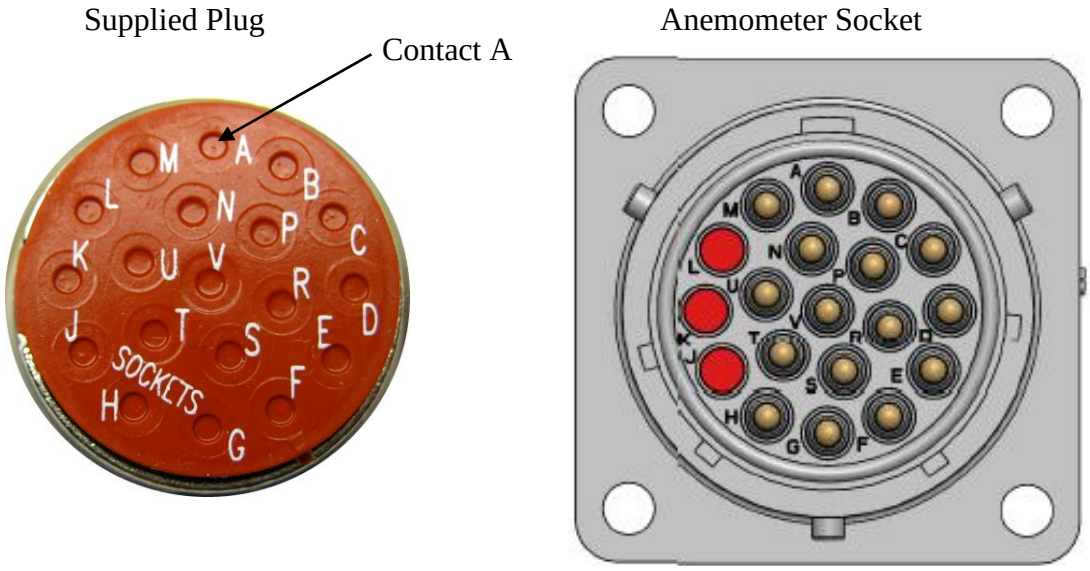

Table 2 - 19 way connector and cable connections

19 Way Connector Terminal Letter	Cable Gland Option		Signal Designation
	Conductor	Colour	
P	Pair 1	Green	RS422 TXB (+)
C	Pair 1	Black	RS422 TXA (-)
U	Pair 2	White	RS422 RXB (+)
V	Pair 2	Black	RS422 (RXA (-)
R	Pair 3	Red	Supply V+
D	Pair 3	Black	Supply V -
M	Pair 4	Blue	Digital 0v
N	Pair 4	Black	Not Used (Isolate)
A	Pair 5	Yellow	Heater + *[1]
B	Pair 5	Black	Heater -*[1]
H	Pair 6	Brown	Analogue Ch 3 *[2]
G	Pair 6	Black	Analogue 0v *[2]
E	Pair 7	Orange	Not Used (Isolate)
F	Pair 7	Black	Not Used (Isolate)
T	Pair 8	White	Analogue Ch 1*[2]
S	Pair 8	Red	Analogue Ch 2*[2]
L No Connection	Pair 9	Green	Not Used (Isolate)
K No Connection	Pair 9	Red	Not Used (Isolate)
J No Connection	Not Applicable	Not Applicable	Not Used

*[1 and 2] **Note may not be functional - check model number and options fitted.**

Default Settings

The factory default settings are:

Non - heated units

A0 B3 C1 E1 F1 G0000 J1 K1 L1 M2 NA O1 P1 T1 U1 V1 X1 Y1 Z1

Plus RWASHORT 10 and RWALONG 60.

Heated units

A0 B3 C1 E1 F1 G0000 H2 J1 K1 L1 M2 NA O1 P1 T1 U1 V1 X1 Y1 Z1

Plus RWASHORT 10 and RWALONG 60.

Note that Heating (H command) is enabled as a default condition. If heating is not required enabled then the H command must be set for H1.

See Section 8 Configuring for further details

Connecting to a PC with a RS422 or RS485 input

The PC requires either an internal RS422 interface card, or an external RS422/485 to RS232 or USB converter, which will plug into the PC or host equipment.

WindObserver 65				Converter, PC, or Logger
Signal Names	19 Way Connector	Cable Gland		RS422/RS485
	Pin No.	Pair No	Colour	Signal Names
TXB (+)	P	1	Green	RXB (+)
TXA (-)	C	1	Black	RXA (-)
RXB (+)	U	2	White	TXA (+)
RXA (-)	V	2	Black	TXB (-)
Digital 0v	M	4	Blue	Signal Ground
Connected Internally				Ground Earth
Sensor +	R	3	Red	+ve Sensor
Sensor -	D	3	Black	-ve PSU *
Heater +	A	5	Yellow	+ve Heater
Heater -	B	5	Black	-ve PSU*
An Ch 1	T	8	White	Ch 1 Device
An Ch 2	S	8	Red	Ch 2 Device
An Ch 3	H	6	Brown	Ch 3 Device
An Ch 0v	G	6	Black	Ch1-3 Return

***** For Power Supply Information see Section 6.4.

Networking units

Before coupling units into a network:

- Each device must be configured with a unique Unit Identifier (letter A to Z) however in multi drop systems it could be advised to avoid using letters A-F, KMN and P as they could appear in the data string.
- Unit must be set for half duplex mode (E2 setting) see Para 7.3).
- It must be configured to a tri-state polled mode M3 or M4.

  See also Section 8 - Configuring

WindObserver 65				Converter, PC, or Logger
Signal Names	19 Way Connector	Cable Gland		RS485 2 wire
	Pin No.	Pair No	Colour	Signal Names
TXB (+)	P	1	Green	
RXB (+)	U	2	White	T/RXB (+)
TXA (-)	C	1	Black	T/RXA (-)
RXA (-)	V	2	Black	
Digital 0v	M	4	Blue	Signal Ground
Connected Internally				Ground Earth
Sensor +	R	3	Red	+ve Sensor
Sensor -	D	3	Black	-ve PSU *
Heater +	A	5	Yellow	+ Heater
Heater -	B	5	Black	- PSU *

To Next Unit

*For Power Supply Information see Section 6.4.

Note: Each unit in the network will require its own power supplies.

6.6. Indoor Power and Communications Interface (Part 1189-PK-021)

The desktop PCI is intended for use in a protected environment and provides interfacing and power to a single anemometer (Note a separate supply is required for heating).

The PCI is not intended for outdoor use.

Note a mains connector lead only is supplied with the PCI Box.

Connecting to a PCI Unit with RS422 input

WindObserver 65				PCI Box	
Signal Names	19 Way Connector	Cable Gland		15 Way D Type Connector	
	Pin No.	Pair No	Colour	Pin No.	Signal Name
TXB (+)	P	1	Green	2	RXB (+)
TXA (-)	C	1	Black	9	RXA (-)
RXB (+)	U	2	White	3	TXB (+)
RXA (-)	V	2	Black	10	TXA (-)
Digital 0v	M	4	Blue	4	Signal Ground
Sensor +	R	3	Red	5	Power V+
Sensor -	D	3	Black	11	Power 0v

To Connect the PCI RS232 Output (9 Pin D Type connector) to a PC RS232 9 way port to communicate with the sensor connect as follows:-.

PCI RS232 Output		PC RS232 Input
Pin 2	→	Pin 2
Pin 3	←	Pin 3
Pin 5 Gnd	—	Pin 5 Gnd

Environmental

PCI Electrical Power Requirements

1) 100Vac – 120Vac, 10VA for the 115V switch position
2) 200 Vac – 250Vac, 10VA for the 230V switch position
3) 20-30Vdc, 120mA max (anemometer)
   8-15Vdc, 50mA max (interface)

3 Fuses protect the unit:

1. Externally accessible 315mA (T) for 115/230v operation
2. Internally accessible 500mA (T) AUX
3. Internally accessible 500mA (T) ANEM

PCI Connector Pin and Cable assignments

Anemometer connector – 15 way

Pin	Designation	(Example Plug MH Connectors MHDM15-DM15P-K)
1	Chassis	(e.g. RS Components 765-9494)
2	RS422_RXB (+)	
3	RS422_TXB (+)	
4	Digital 0V, Signal ground	
5	Supply V+	
6	Analogue output V1	
7	Not used	
8	Analogue output V2	
9	RS422_RXA (-)	
10	RS422_TXA (-)	
11	Supply V-	
12	Not applicable	
13	Analogue 0V	
14	Not used	
15	Analogue output V3	

Auxiliary Analogue Outputs – 9 way Plug

Pin	Designation	(Example MH Connectors MHDM9-DM9S-K)
1	Earth	(e.g. RS Components 765-9488)
2	Analogue Ground 1	
3	Analogue Ground 2	
4	Analogue Ground 3	
5	Not applicable.	
6	Analogue Output 1 (direct connection to Anemometer Connector Pin 6)	
7	Analogue Output 2 (direct connection to Anemometer Connector Pin 8)	
8	Analogue Output 3 (direct connection to Anemometer Connector Pin 15)	
9	Not applicable	

DC Supply – 4 way

Pin	Designation	(Example Connector Amphenol CO91A)
1	Interface V+	(e.g. T3301001)
2	Interface V-	
3	Anemometer V-	
4	Anemometer V+	

RS 232 Output – 9 way Skt

Pin	Designation	(Example Plug MH Connectors MHDM9-DM9P-K)
1	DCD	(e.g. RS Components 765-9485)
2	RX data	
3	TX data	
4	DTR	
5	Signal Ground	
6	DSR	
7	RTS	
8	CTS	
9	RI	

RS422 Network In – 9 way Skt

Pin	Designation	(Example Plug MH Connectors MHDM9-DM9P-K)
1	Not connected	(e.g. RS Components 765-9485)
2	Not connected	
3	Not connected	
4	RS422_RXA (-)	
5	Signal ground	
6	RS422_TXA (-)	
7	RS422_TXB (+)	
8	RS422_RXB (+)	
9	Chassis	

RS422 Network Out – 9 way Plg

Pin	Designation	(Example MH Connectors MHDM9-DM9S-K)
1	Not connected	(e.g. RS Components 765-9488)
2	Not connected	
3	Not connected	
4	RS422_RXA (-)	
5	Signal ground	
6	RS422_TXA (-)	
7	RS422_TXB (+)	
8	RS422_RXB (+)	
9	Chassis	

PCI Operation.

There are three Red LED’s on the PCI front panel.

When the PCI box is powered the Power LED will illuminate.

When a WindObserver is connected as above to the PCI box and is set to output continuous data the PCI box RX LED will flash on/off at the WindObserver output rate thus giving a good indication that the WindObserver output is wired to the PCI box correctly and outputting RS422 data correctly.

If the PCI RS 232 connection is connected to a computer then when a terminal programme is opened and commands sent by a PC keypad or program to the PCI box its TX LED will illuminate intermittently indicating a good connection between the PC and PCI box.

6.7. Analogue Connections

When using the analogue outputs it is advisable to use a low pass filter to remove any high frequency noise present.

The analogue signals can be susceptible to external interference if unprotected. The anemometer cable has individual screens covering each channel's signal wires. The continuing cable connected to the anemometer must be of equal or greater cross sectional area as the anemometer cable and must be individually screened or screened pairs.

Note that connections can also be made to a PC or other device as described in the preceding section.

REFER TO SECTION 8.6 the T command selects Voltage or Current Output on Channels 1-3.

Analogue Voltage Output Connections (5v or ± 2.5v)

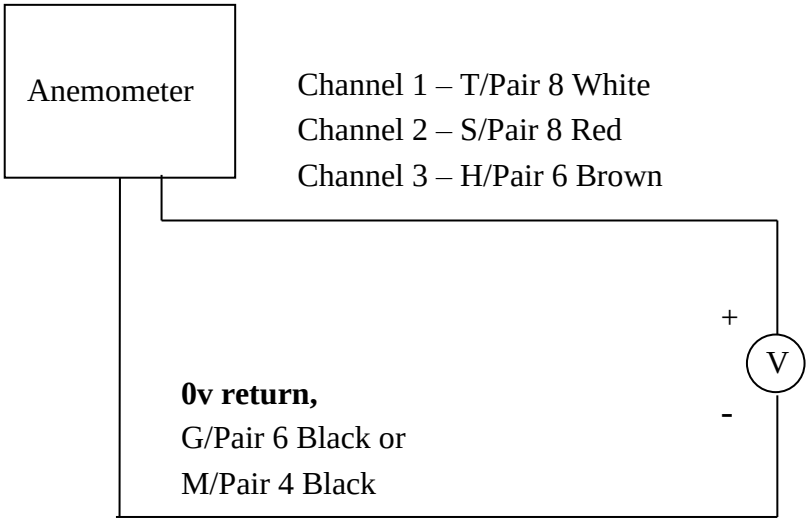

Analogue Connections for 4-20mA output

Important – When using the current outputs, the output loads on each channel MUST be less than 300 ohms, including cable resistance.

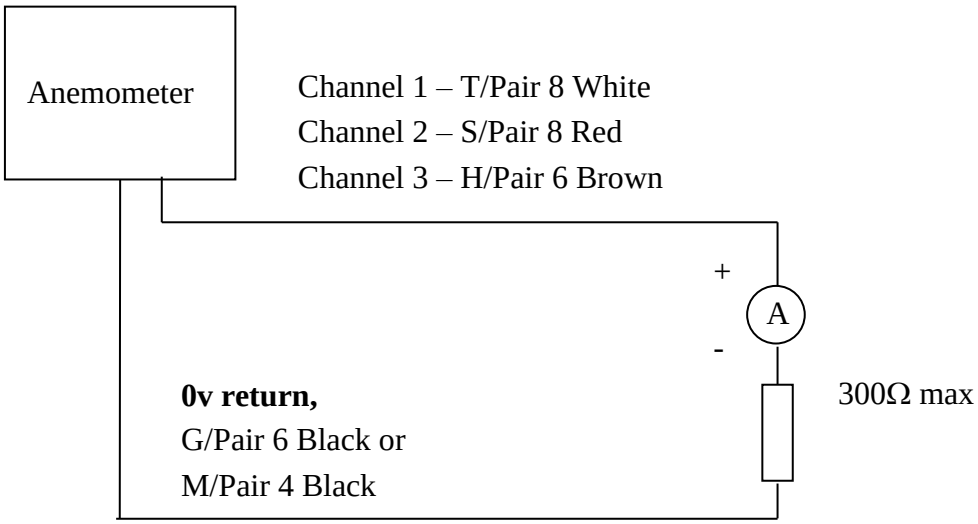

6.8. Using the WindObserver 65 with WindDisplays

Marine WindDisplay

The WindObserver 65 is designed to interface with a Marine WindDisplay unit to provide a complete wind speed and direction system.

When coupled to a Gill supplied Marine WindDisplay (Fig 3), the WindObserver 65 must be set for NMEA (M5 setting, not default) and 4800 baud (B2 setting, not default).

In some installations NMEA, 9600 baud (B3 setting) is used and this would require re-configuring both the WindObserver and the display for 9600 baud to work.

If the WindObserver 65 is used in default CSV mode (O1) and a fault occurs then note that the WindDisplay may lock into the last valid reading. If required re-configuring the WindObserver 65 to Fixed Field output (O2) will ensure that any fault is flagged on the WindDisplay.

WindObserver 65, 4800 Baud and NMEA unheated configuration settings would be:-

A0 B2 C1 E1 F1 G0000 J1 K1 L1 M5 NA O1 P1 T1 U1 V1 X1 Y1 Z1

WindObserver 65, 4800 Baud and NMEA heated configuration settings would be:-

A0 B2 C1 E1 F1 G0000 H2 J1 K1 L1 M5 NA O1 P1 T1 U1 V1 X1 Y1 Z1

NOTE: Although the WindDisplay can show wind speed in various units, these are calculated within the WindDisplay. **The WindObserver data sent to the WindDisplay must be in metres/sec** (U1 factory default output setting).

Gill Supplied Marine Wind Display Part Numbers are:-

Gill Display Part	Supply Voltage	Data Format	Baud Rate
1086-PK-083	220V AC	NMEA	4800
1086-PK-084	110V AC	NMEA	4800

After coupling the WindObserver to a WindDisplay, the Wind Speed units and the Averaging period can be selected using the WindDisplay controls.

Figure 3 Gill Supplied Marine WindDisplay

Connections to a Gill Marine WindDisplay

If required the WindDisplay can provide a 15V DC supply voltage for the WindObserver sensor circuitry but cannot be used to provide a supply voltage for heater circuitry.

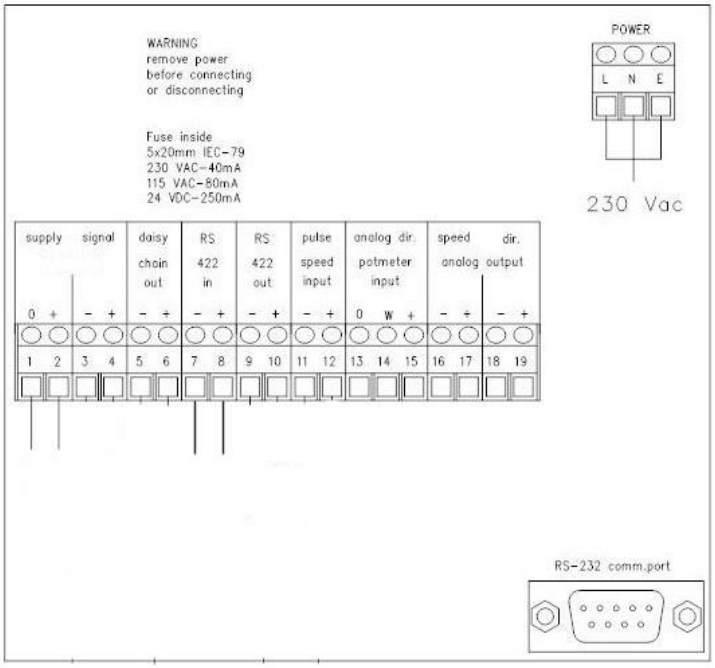

Wiring Connections

WindObserver 65					Marine WindDisplay	
Signal Names	19 Way Connector	Cable Gland				
	Pin No.	Pair No	Colour		Signal Names	Terminal
TXB (+)	P	1	Green	→	RS422 +	8
TXA (-)	C	1	Black	→	RS422 -	7
Connected Internally					Ground Earth	
Sensor +	R	3	Red		Supply +	2
Sensor -	D	3	Black		Supply 0	1

Heater +	A	5	Yellow	+ve	Heater
Heater +	B	5	Black	-ve	Supply *

Notes:-

*For Heater Power Supply Information see Section 6.4.

See Section 8, WindObserver configuration if required.

Meteorological WindDisplay

The WindObserver 65 is designed to interface with a Meteorological WindDisplay unit to provide a complete wind speed and direction system.

To interface to the Meteorological WindDisplay the WindObserver must be set for NMEA (M5) and 4800 Baud (B2) configuration settings.

WindObserver 65, 4800 Baud and NMEA unheated configuration settings would be:-
A0 B2 C1 E1 F1 G0000 J1 K1 L1 M5 NA O1 P1 T1 U1 V1 X1 Y1 Z1
WindObserver 65, 4800 Baud and NMEA heated configuration settings would be:-
A0 B2 C1 E1 F1 G0000 H2 J1 K1 L1 M5 NA O1 P1 T1 U1 V1 X1 Y1 Z1

Meteorological Wind Display Part numbers are:-

Gill Part	Supply Voltage	Data Format	Baud Rate
1086-PK-120	100V to 240V AC	NMEA	4800
1086-PK-121	18V to 32V DC	NMEA	4800

NOTE: Although the WindDisplay can display wind speed in various units, these are calculated within the WindDisplay. **The WindObserver data coming to the WindDisplay must be in metres/sec** (U1 factory default output setting).

Meteorological WindDisplay

Connections to a Meteorological WindDisplay.

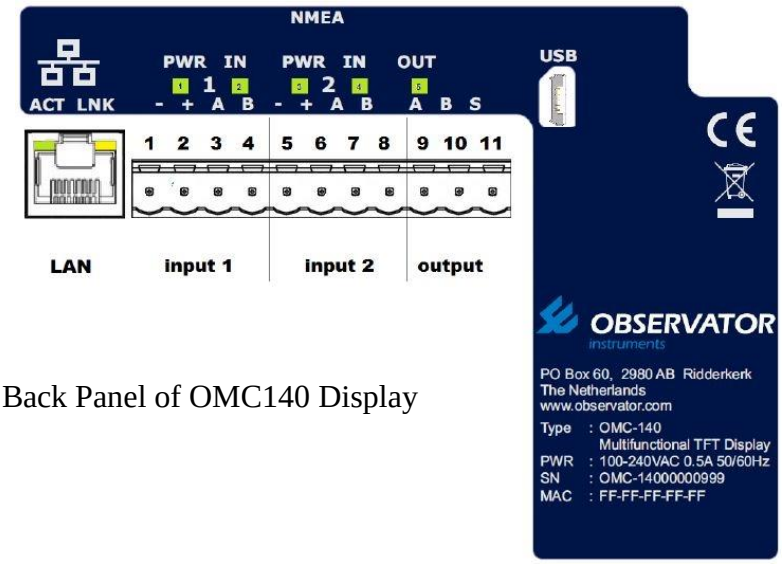

Back Panel of OMC140 Display

Wiring Connections

19 Way Connector Terminal Letter	Cable Gland Options		Signal Designation	Wind Display	
	Conductor	Colour		Pin Number	Designation
P	Pair 1	Green	RS422 TXB (+)	4	NMEA Input B
C		Black	RS422 TXA (-)	3	NMEA Input A
U	Pair 2	White	RS422 RXB (+)	N/C	
V		Black	RS422 RXB (-)	N/C	
R	Pair 3	Red	Supply +	2	Power out +15vdc
D		Black	Supply -	1	Power out Gnd
M	Pair 4	Blue	Digital 0v	N/C	

For Power Supply Information see Section 6.4.
See Section 8, WindObserver configuration if required.

6.9. Mechanical installation

Do NOT remove the black "rubber" transducer caps.

Take care not to knock the four Transducer arms.

Before installing, a bench system test is recommended.

All the time the WindObserver 65 is not in its final location, it should be protected from damage by keeping it in the original packaging as long as possible, treating it as a delicate instrument.

When installing the unit handle with lint free gloves and degrease the unit to reduce the build-up of deposits.

Do not apply clamps to the WindObserver cylinder body as this will distort the cylinder and affect sealing.

Location

It is important to ensure that the WindObserver 65 is mounted in a position clear of any structure, which may obstruct the airflow or induce turbulence.

Do NOT mount the WindObserver 65 in close proximity of high-powered radar or radio transmitters. A site survey may be required if there is any doubt about the strength of external electrical noise. (*See Section 6.1)*

Orientation

Normally the WindObserver 65 is mounted vertically with the cable exit at the bottom.

Alternatively, the unit may be mounted in any orientation, but note that if the unit is mounted with the cable uppermost, the base **must** be fully sealed externally to prevent water penetration. Fit the supplied gasket if the 2 metal mounting faces are of dissimilar metals to prevent galvanic corrosion.

Mounting bracket (Short and Long Mounts)

A suggested mounting bracket using Short or Long Mounts is shown in Fig 1.

It is recommended that the WindObserver 65 mounting bracket be manufactured from stainless steel 316, to prevent possible galvanic corrosion.

It is also recommended that the supplied gasket be always fitted to ensure IP66 rating and to prevent galvanic corrosion if the mounting bracket is not manufactured from stainless steel 316.

Stainless steel 316 fixings must be used.

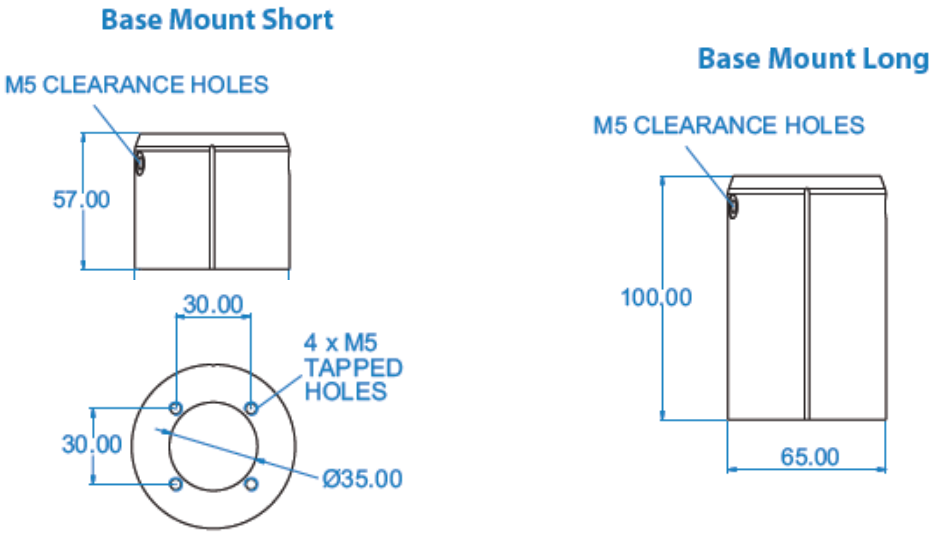

Figure 1. Suggested mounting bracket and Earthing (grounding) arrangements

The example shows a long mount fitted to a cable gland unit, a similar Earthing/ mounting arrangement can be used with short mounts and connector based units.

A mounting kit (1390-10-164) is supplied with the WindObserver 65 to allow assembly of the mount to the base of the WindObserver.

Included in the supplied mounting kit is an O Ring Seal which must be fitted inside of the Base Mount.

Now fit the Base Mount to the WindObserver base using supplied 3 off M5x12 screws, first fit a wavy washer to them, then a flat washer, then the seal washer before screwing to the WindObserver Base mount.

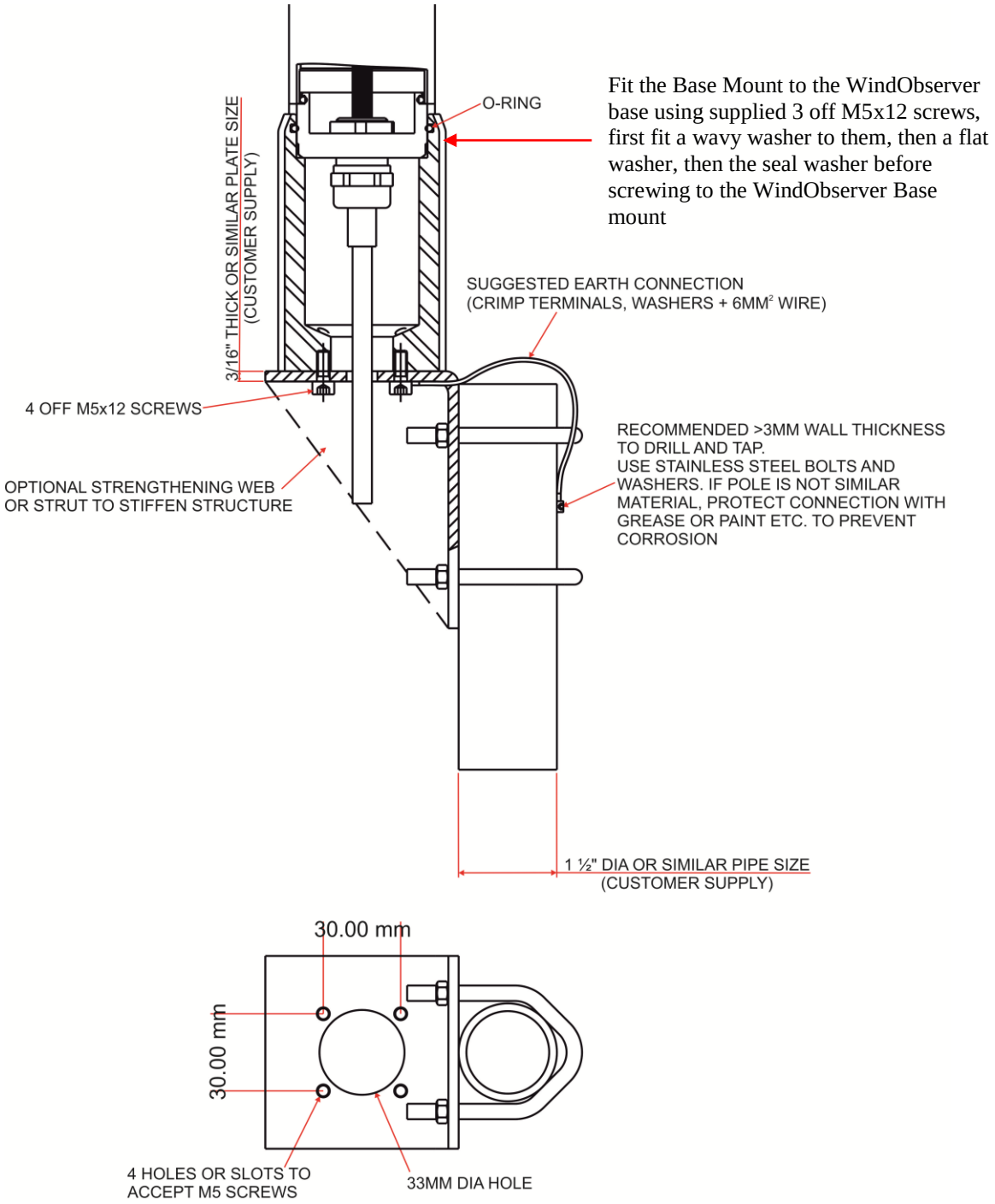

Pipe Mounting (use with Pipe Mount)

The Pipe Mount base for the WindObserver 65 has the following dimensions.

Included in the supplied mounting kit is an O Ring Seal which must be fitted inside of the Pipe Mount Base.

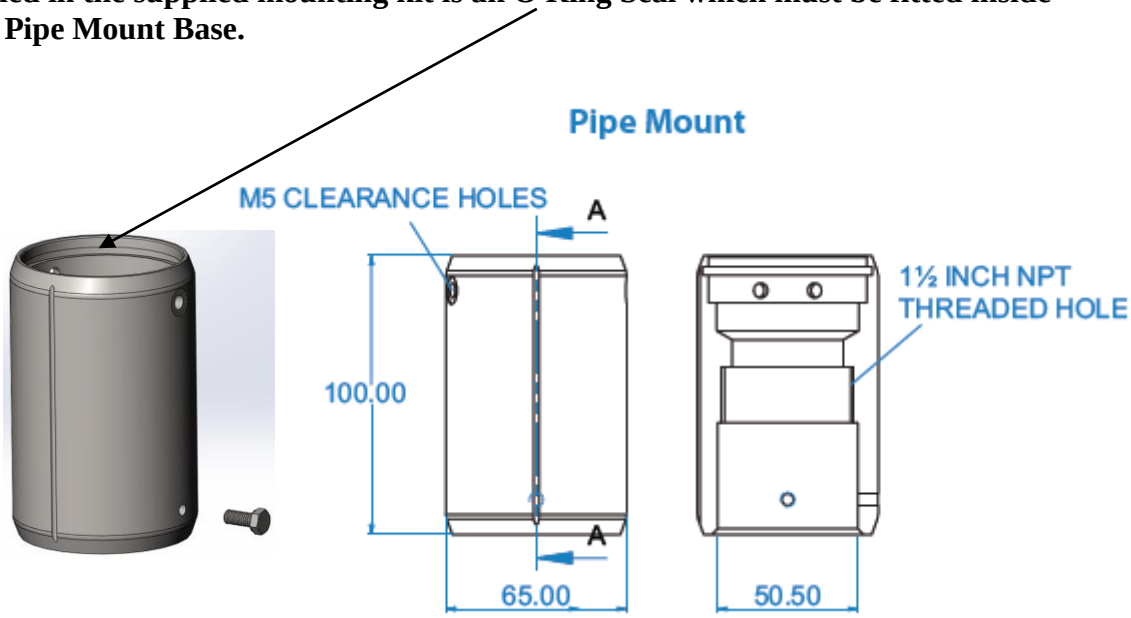

The mounting pole dimension should be 50mm (1.97”) diameter.

Three M5 x 12 hex screws are provided to secure the Pipe Mount to the WindObserver base.

Three M5 x 12 hex screws to secure the Pipe Mount to the pipe through M5 tapped holes in the Pipe Mount.

If a screw threaded pole is used it should be a 1.5 inch National Pipe Thread (NPT) type.

It is recommended that the WindObserver mounting pole be manufactured from Stainless Steel 316, to prevent possible galvanic corrosion.

Custom Mount (Use with WindObserver No Mount Option)

Although it is recommended that customers select a base mount option from Gill Instruments, should a customer wish to design their own mount then the WindObserver base dimension details for this are as follows:-

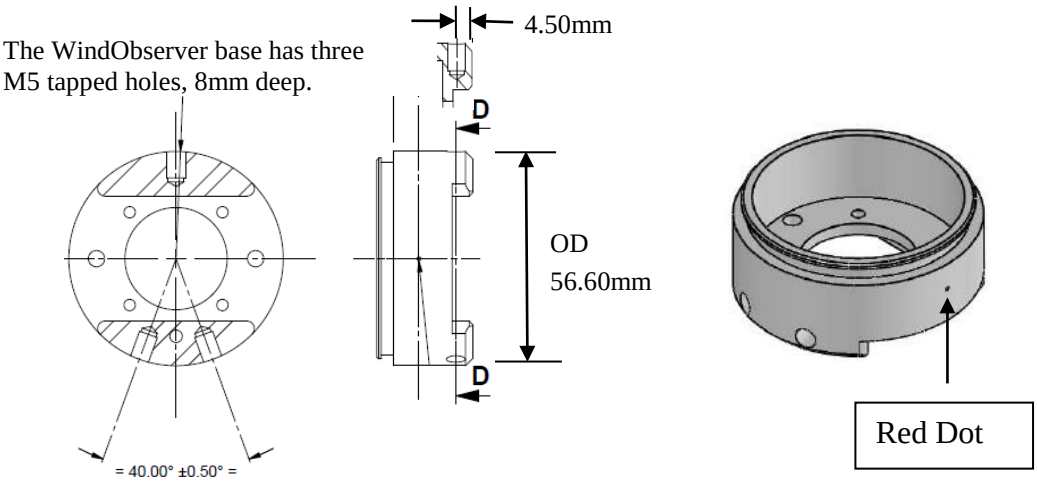

Alignment

The anemometer should be set to point North (or to another known reference direction), using the North Spar, which can be identified from the red dot on the base of the instrument or vertical groove on short base, long base or pipe mount adaptor.

See *Figure 2a*.

Since all wind measurements are made relative to the North Spar, it is important to use only the North Spar for alignment and not the red dot located at the base of the unit (only visible without base mount) nor the vertical groove located on the base mount (only when fitted).

If the unit is used in a tunnel, (and the Tunnel format is used), the unit would normally be aligned with the N – S axis in the horizontal plane.

Figure 2a North Marker (Long Base Mount shown for illustrative purposes).

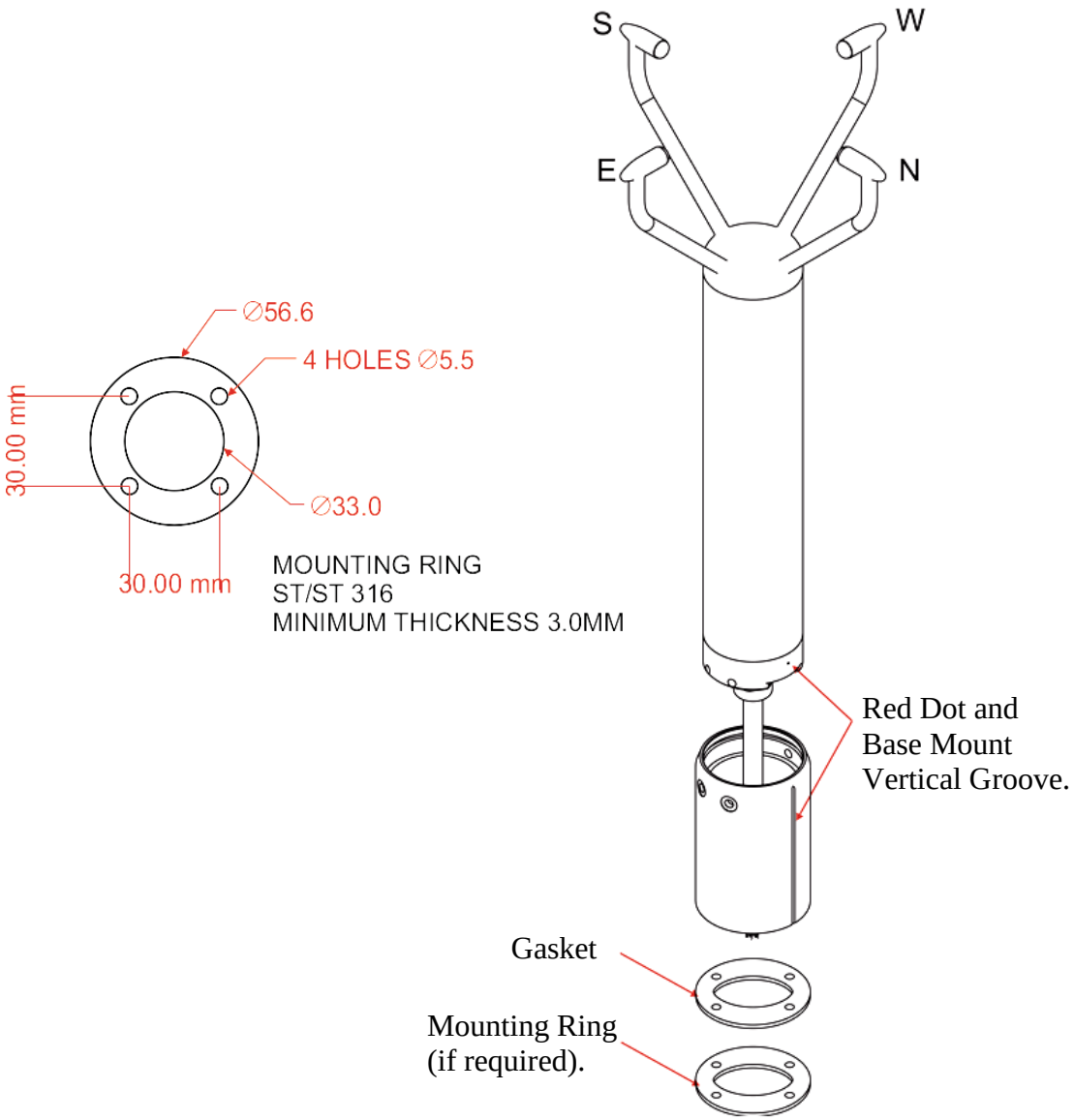

Pipe Mount units do not require the gasket and mounting ring.

Figure 2b WindObserver 65 outline dimensions

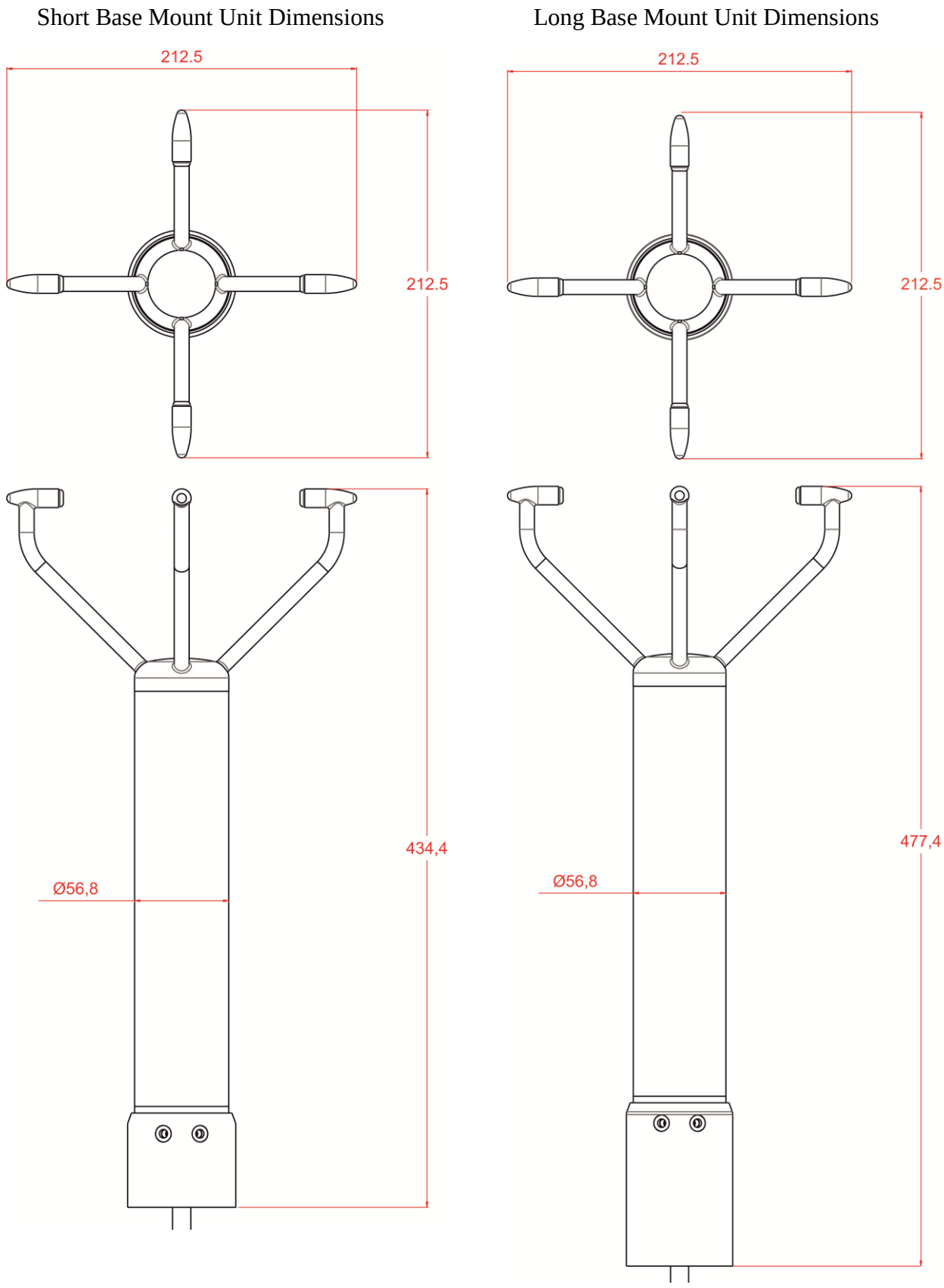

Pipe Mount Unit Dimensions

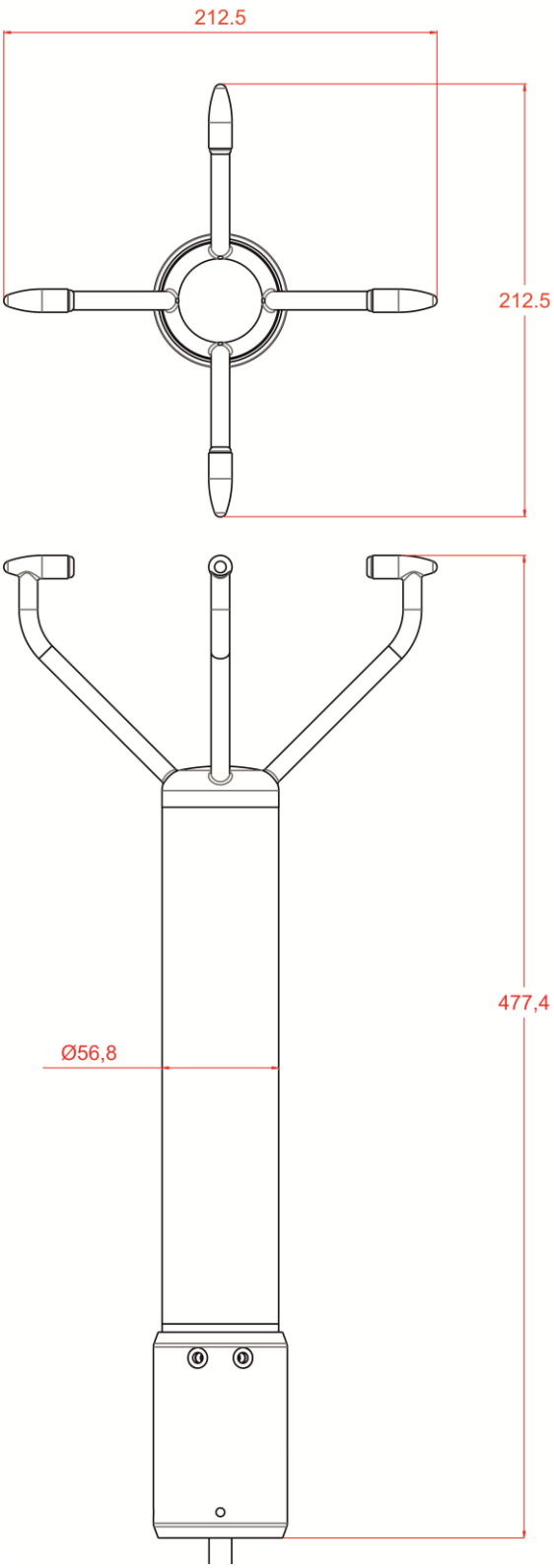

7. MESSAGE FORMATS & OPTIONS

On first applying power to the WindObserver 65, it will be in 'Measurement Mode', and it will output wind measurement information within 3 seconds in one of the formats as described below.

Setting the output format, units, other parameters, options and the communication settings are all carried out in the alternative 'Configuration Mode'.

See Section 8 CONFIGURING for details of how this is done.

The factory default settings are shown here in **bold**, *and for convenience some 'Configuration codes' (as used to set the configuration) are shown in blue boxes. For example* M3.

7.1. Wind Speed format

The wind speed measurements can be output in one of the following formats:
UV, Polar, Customer formats (NMEA and Tunnel).

7.2. Output formats

The UV and Polar wind speed parameters are output in either ASCII or binary. These parameters can be transmitted continuously or polled from the user.

Polar is also available in continuous NMEA format.

Output Formats Table

Output format	Output (see Notes below)	Configuration code
ASCII UV	Continuous	M1
	Polled	M3
ASCII Polar	**Continuous**	**M2**
	Polled	M4
ASCII Tunnel	Continuous	M12
ASCII Tunnel	Polled	M13
NMEA	Continuous	M5
Binary Tunnel	Continuous	M6
Binary UV short	Continuous	M7
Binary Polar	Continuous	M8
ASCII Polar	Continuous Averaged	M15
ASCII Polar	Polled Average	M14

Notes:-

1. Continuous Output: In this mode the unit continuously outputs a burst of RS422 level data (the frequency determined by the output rate setting). After the burst of data and until the next data burst the data lines revert to a high impedance state.
2. Polled Output: In this mode the data lines are in a high impedance state until the unit is polled for data. Upon receipt of a poll command the unit outputs a burst of data at RS485 levels and then reverts to a high impedance state until the next poll command receipt.

Low wind speeds

Whilst the wind speed is below 0.05 metres/sec, the wind direction will not be calculated, and the last known good direction figure is shown. All other output parameters will continue to update at the output rate.

7.3. Networking

Gill Proprietary Network

Each anemometer connected to the network **MUST** be given a unique Unit Identifier (Letters A to Z), and set to a polled tri-state mode (UV or Polar) (M3, M4 or M13). In these modes the communications transmit line is tri-state unless the anemometer is responding to a command. If used in a multi drop system then it is recommended that Unit Identifiers A, B, C, D, E, F, K, M, N and P are not used.

Configuring WindObserver 65 for Half Duplex Operation.

1) Set up Two Terminals: One for RS485 Half Duplex and the other for RS422 Full Duplex.

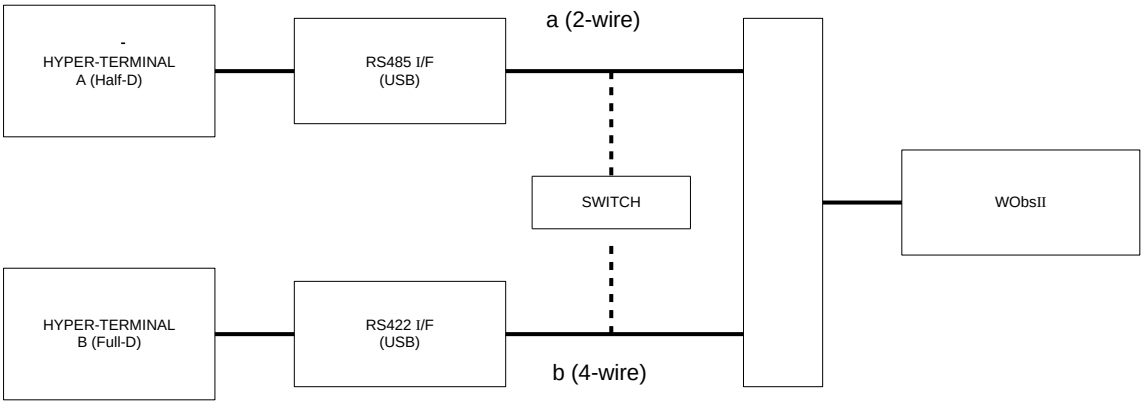

One PC (with two USB ports) can be used for both Terminals, although two may be less confusing.

Note: Power must not be disconnected from the anemometer throughout this procedure.

2) Assuming the unit is set for Full Duplex, connect 9-way at [b] disconnect 9-way at [a]. Set Switch to position [b] (4 wire).
3) On Terminal B, enter CONFIGURATION MODE. Set Half Duplex (E2). The CONFIRM> prompt will appear.
4) Disconnect 9-way [b] and connect 9-way [a]. Set Switch to position [a] (2 wire).
5) On Terminal A, type “E” <ENTER> to confirm.
6) The unit should now be configured in Half Duplex mode.

Configuring WindObserver 65 for Full Duplex Operation.

1) Assuming the unit is set for Half Duplex, disconnect 9-way [b] and connect 9-way [a]. Set Switch to position [a] (2 wire).
2) On Terminal A, type “E1” to select Full Duplex. The CONFIRM> prompt will appear.
3) Disconnect 9-way [a] and connect 9-way [b]. Set Switch to position [b] (4 wire).
4) On Terminal B type “E” <ENTER> to confirm.

7.4. Units

The wind speed can be set to any of the following units:

Unit	Abbreviation
Metres per sec	m/s
Knots	knots
Miles per hour	MPH
Kilometres per hour	kph
Feet per minute	fpm

7.5. Output rate

The output frequency can be set between 1 and 10 per second. The wind speed is sampled every 25ms, each axis being sampled sequentially. The following Table lists the possible outputs per second and the corresponding number of averaged samples. A 25ms sample period is used to process and output the results.

Outputs per Second	Sample Average
1	39
2	19
4	9
5	7
8	4
10	3

7.6. Averaging (Digital Data)

There are two digital averaging options:-

7.6.1 G Command Averaging.

Using the G Command in association with modes other than M14, M15 and polled modes.

The Averaging Period can be set from zero to 3600 secs. (1 hour). The default setting is zero**.** When averaging is enabled, data is output at a rate determined by the averaging period. The data is an average of valid data collected during the averaging period.

If G is set to zero then averaging settings will be disabled.

For instance if the unit is set for G0025 then every 25 seconds there will be a single result output that provides the average of the wind direction and magnitude data over the last 25 seconds.

A,219,000.78,M,60, 0D
A,202,000.79,M,60, 06
A,207,001.22,M,60, 0C
A,220,000.48,M,60, 04

7.6.2 Modes 14 and 15 Road Weather Averaging (RWA).

The averaging is implemented with reference to the following standard:

- Guide to Meteorological Instruments and Methods of Observation – World Meterological Organization WMO-No8 seventh edition 2008 ISBN 978-92-63-10008-S

The direction and magnitude outputs are derived from the vector sum of U and V over the RWALONG averaging period (default 10 minutes in P1).

The gust output is derived from the vector sum of U and V over 3 readings (3 seconds in P1), and the max gust is the maximum of the gust value over the RWASHORT period (default 60 seconds in P1). The max gust value is reset to zero at the end of each RWASHORT period.

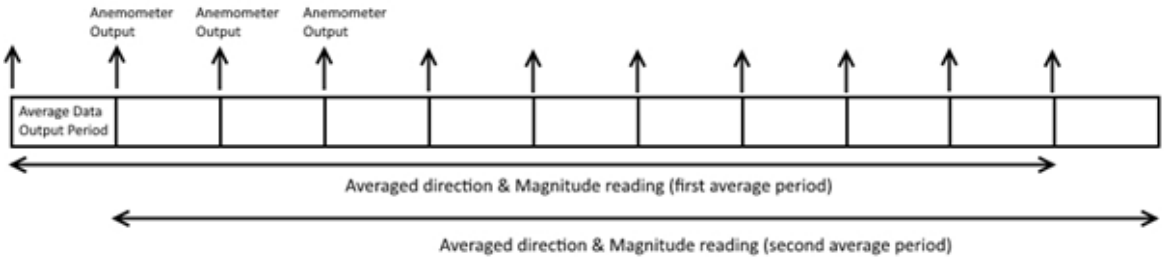

RWA Default settings are:-

P (Output rate Hz) = 1

RWASHORT = 60

RWALONG = 10

Therefore:

Anemometer output period = 60/1 = **60 seconds** (the WindObserver will output a reading every 60 seconds).

Averaged direction and magnitude reading = 10 x 60 = **600 seconds** (this is the time the readings will be averaged over).

When the average building period has been completed, the average reported thereafter will be a rolling average derived from the last averaged direction and magnitude time period.

Mode 15 – Averaging Data in Continuous mode.

Averaged Digital Data Output comprises of.

<Start of String>, Unit Identifier, Mode, Averaged Direction, Averaged Magnitude, units, Maximum Gust Direction, Maximum Gust Magnitude, Status, <End of String>, checksum.

e.g.

```
0A,M15,293,000.03,M,338,000.05,51,47
```

(status code 51 shows measurement average building, non-heat enabled units only).

```
0A,M15,198,000.04,M,088,000.39,00,4B
```

(status code 00 code shows measurement average building period complete and normal operation, non-heat enabled units only).

Principle set up commands associated with this averaging mode are:-

Px:- Measurement Rate, (P1) this command sets the underlying measurement rate 1Hz.

RWASHORT xx: - Short Term Number, where xx is a number from 10 to 60.

RWALONG xx: - Long Term Number, where xx is a number from 1 to 10.

The Averaged Data Output period in seconds is:-

RWASHORT Number
Measurement Rate (P Setting Hz value)

Therefore with the RWASHORT number set for 60 (default) and P command set for 1Hz (P1 default) the unit will output a rolling averaged reading every 60 seconds.

The Averaged Direction and Magnitude reading is based on:-

RWALONG Number * Averaged Data Output period.

Therefore if the RWALONG number is 10 (default) and Averaged Data Output Period is 60 seconds, then the rolling averaged Direction and Magnitude data is calculated over rolling 600 readings.

```
0A,M15,293,000.03,M,338,000.05,51,47
0A,M15,301,000.03,M,304,000.04,51,43
0A,M15,299,000.03,M,285,000.02,51,4D
0A,M15,303,000.02,M,336,000.02,51,47
0A,M15,291,000.03,M,200,000.64,51,48
0A,M15,291,000.02,M,301,000.03,51,48
0A,M15,243,000.04,M,172,001.52,51,42
0A,M15,236,000.03,M,090,000.08,51,44
0A,M15,243,000.03,M,099,000.09,51,4E
0A,M15,198,000.04,M,088,000.39,00,4B
0A,M15,180,000.04,M,099,000.09,00,41
0A,M15,180,000.03,M,345,000.03,00,4E
```

The Maximum Gust Direction is the direction of the maximum gust measured over the short term output period. Gust is generated from a rolling 3s average of the short term output period, and reset at the end of short term output period.

The maximum Gust Magnitude is the magnitude of the maximum gust measured over the short term output period. Gust is generated from a rolling 3s average of the short term output period, and reset at the end of short term output period.

Notes:-

Non Heat Enabled Units - Whenever the unit is powered up then until the unit has reached its minimum long term averaging interval the status code will read 51 (Measurement Average Building).

Heat Enabled Units - On units where heat is enabled Code 51 will not be output during the measurement average building period, therefore allow for this period on power up before taking readings to be fully averaged (maximum period of 10 minutes).

The G Command setting has no effect on Mode 14 and Mode 15 Settings.

Mode 14 – Averaging Polled Mode

See Mode 15 for data output format and command explanations.

For ease of use before changing to this Mode set all other WindObserver parameters first including:-

Px:- Measurement Rate, (P1) this command sets the underlying measurement rate of 1Hz.

RWASHORT xx: - Short Term Number, where xx is a number from 10 to 60.

RWALONG xx: - Long Term Number, where xx is a number from 1 to 10.

Once set for Mode 14, to Poll for averaged data use the ? command followed by the unit designator A (default setting, ensure capitol letter used).

The polled mode commands available in this mode are:

Description	Command	WindObserver response
Enable Polled Mode	?	(None)
WindObserver Unit Identifier (N)	A…….Z	Output generated
Disable Polled mode	!	(None)
Request WindObserver Unit Identifier	&	A ….. Z (as configured)
Enter Configuration mode	*<N>	CONFIGURATION MODE

Where <N> is the unit identifier, if used in a multi-drop system then it is recommended that ID's A to F and KMNP are not used as these characters can be present in the data string.

It is suggested that in polled mode the following sequence is used for every poll for information.

? Ensures that the Sensor is enabled to cover the event that a power down has occurred.

A-Z Appropriate unit designator (capitol letter) sent to retrieve a line of data.

! Sent to disable poll mode and reduce possibility of erroneous poll generation.

When polled with the default Mode 14 factory setting the WindObserver (set for default 1Hz output) will output the last valid 10 minute wind speed and direction average, updated every minute along with last valid 1 minute Gust magnitude.

Notes

Non Heat Enabled Units.

If the unit is powered up and polled before the unit has reached its minimum averaging interval the status code will read 51 (Measurement Average Building, non heat enabled units only).

Heat Enabled Units.

On units where heat is enabled Code 51 will not be output if polled during the measurement average building period, therefore allow for this period on power up before taking readings to be fully averaged (maximum period of 10 minutes).

```
aA,M15,293,000.03,M,338,000.05,51,47
aA,M15,301,000.03,M,304,000.04,51,43
aA,M15,299,000.03,M,285,000.02,51,4D
aA,M15,303,000.02,M,336,000.02,51,47
aA,M15,291,000.03,M,200,000.64,51,48
aA,M15,291,000.02,M,301,000.03,51,48
aA,M15,243,000.04,M,172,001.52,51,42
aA,M15,236,000.03,M,090,000.08,51,44
aA,M15,243,000.03,M,099,000.09,51,4E
aA,M15,198,000.04,M,088,000.39,00,4B
aA,M15,180,000.04,M,099,000.09,00,41
aA,M15,180,000.03,M,345,000.03,00,4E
```

7.7. Options

Speed of Sound (SOS) and Temperature

Either or both of these parameters can be selected or disabled

Note that neither of these parameters is available in Tunnel or NMEA formats.

SOS is useful for calculating air temperature with a rapid response. Sonic temperature is derived from the SOS, based on an assumption of the composition of the atmosphere. Humidity will affect the result.

True temperature can be calculated by:

$$T = \frac{Ts}{1+0.32\,e/p}$$

Where T = True temperature (Kelvin)

Ts = Sonic temperature

e = Vapour pressure of water in air

p = absolute pressure of water in air

Heating (If fitted)

Heating is autonomous and requires no set-up once activated.

45° Offset

If required, the U axis can be offset +45° to the transducer axis.

Vertical Output Padding

A dummy W vector is inserted to provide compatibility with any WindMaster that may be in a network.

7.8. ASCII message format (UV, Polar and Tunnel)

ASCII UV format

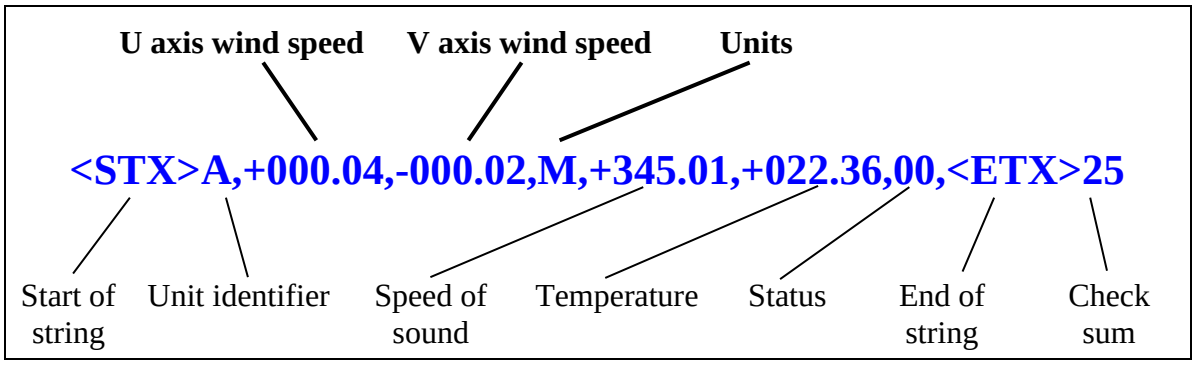

Where

U axis wind speed In increments of 0.01 units (±UUU.UU)

V axis wind speed In increments of 0.01 units (±VVV.VV)

Units

Value	Units
M	Metres per second (m/s)
N	Knots (knots)
P	Miles per hour (MPH)
K	Kilometres per hour (kph)
F	Feet per minute (fpm)

Start of string ASCII value 2

Unit identifier Letter A – Z (**default A)**

Speed of sound In metres per second (if enabled)

Temperature Sonic temperature in degrees C (if enabled)

Status

Value	Status
0	OK
60	Heating enabled and OK if enabled
Any other value	Warning or fault condition - *see Section 9.5*

End of string ASCII value 3

Check sum Exclusive OR of all characters between Start of String and End of String reported as ASCII hex.

ASCII Polar format

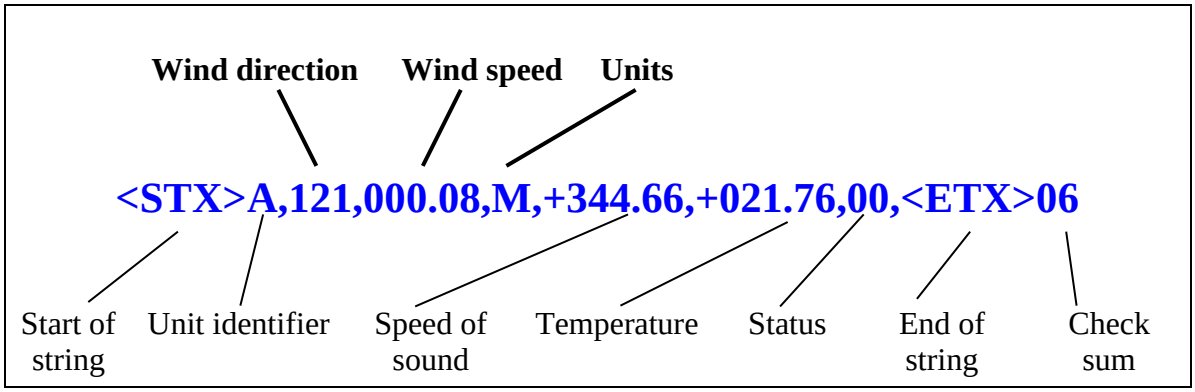

Where

Wind direction	In degrees relative to N (DDD)
Wind speed	In increments of 0.01 units (±MMM.MM)
All other parameters	*See Section 7.8* ***ASCII UV format***

ASCII Polled (UV and Polar)

When in the Polled mode, an output is only generated when the host system sends a Poll signal to the WindObserver consisting of the WindObserver Unit Identifier – that is, the relevant letter A – Z.

The output formats are otherwise as described above.

The commands available in this mode are:

Description	Command	WindObserver response
WindObserver Unit Identifier	A ….. Z	Wind speed output generated
Enable Polled mode	?	(None)
Disable Polled mode	!	(None)
Request WindObserver Unit Identifier	&	A ….. Z (as configured)
Enter Configuration mode	*<N>	CONFIGURATION MODE

Where <N> is the unit identifier, if used in a multi-drop system then it is recommended that ID's A to F and KMNP are not used as these characters can be present in the data string.

It is suggested that in polled mode the following sequence is used for every poll for information.

? Ensures that the Sensor is enabled to cover the event that a power down has occurred.

A-Z Appropriate unit designator sent to retrieve a line of data.

! Sent to disable poll mode and reduce possibility of erroneous poll generation.

When in polled mode the system will respond to the data command within 30mS with the last valid data sample as calculated by the Output rate (P Mode Setting).

If the unit is powered down after use or upon switch on then allow 3 seconds from switch on before sending poll commands.

ASCII format – Tunnel Mode

In this mode, the output is given as signed (i.e. positive or negative) speeds along the 'U' (= South – North) axis and direction as a 1 or 0.

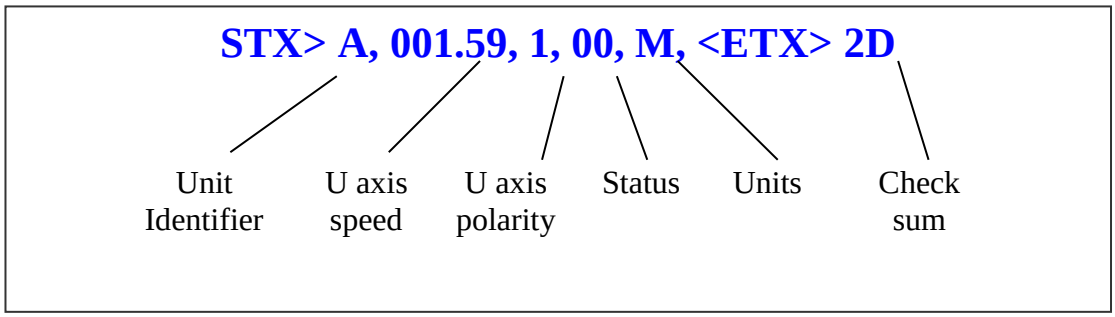

Where:

<STX>	=	Start of string character (ASCII value 2)
Unit Identifier =		Letter A to Z (A Default)
U axis	=	U axis Wind Speed
U axis	=	U axis Wind Direction Polarity where 0 (–U vector) is a wind from the North direction or 1 (+U vector) is a wind from the South direction.
All other parameters		*See Section 7.8* ***ASCII UV format***

7.9. Binary message format (UV, Polar and Tunnel)

Binary UV format

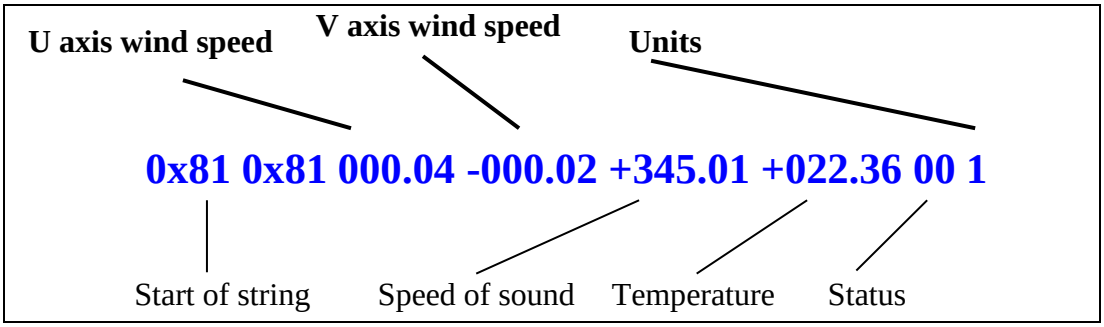

Where

U axis wind speed In increments of 0.01 units (±UUU.UU)

V axis wind speed In increments of 0.01 units (±VVV.VV)

Units

Value	Units
1	Metres per second (m/s)
2	Knots (knots)
3	Miles per hour (MPH)
4	Kilometres per hour (kph)
5	Feet per minute (fpm)

Start of string

Speed of sound In metres per second (if enabled)

Temperature Sonic temperature in degrees C (two's complement signed) (if enabled)

Status

Value	Status
0	OK
60	Heating enabled and OK
Any other value	Warning or fault condition - *see Section 10.5*

Binary Polar format

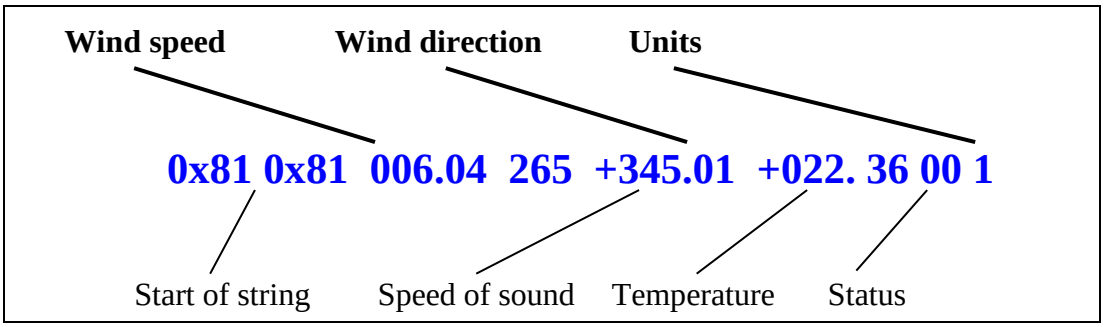

Where

Wind direction In degrees relative to N (DDD)

Wind speed In increments of 0.01 units (±MMM.MM)

All other parameters *See Section 7.9* ***Binary UV format***

Binary Tunnel format

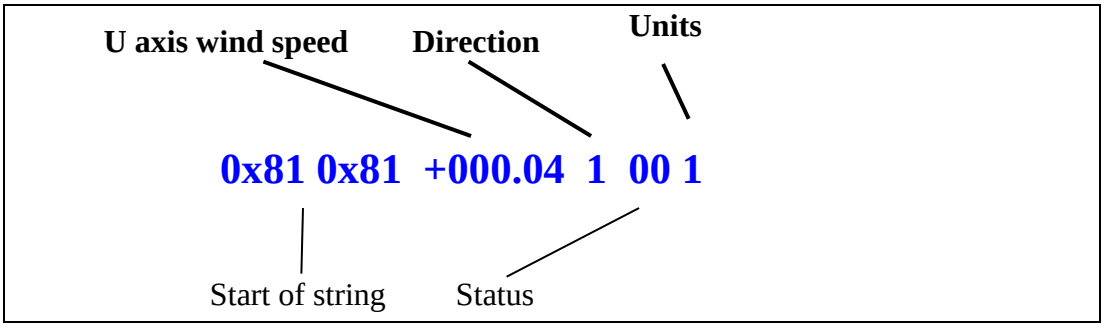

U axis Wind speed	In increments of 0.01 units (±MMM.MM)
Direction (along U axis)	**Value** **Polarity** 1 +U 0 -U
Other parameters	*See Section 7.9* ***Binary UV format***

7.10. NMEA Format

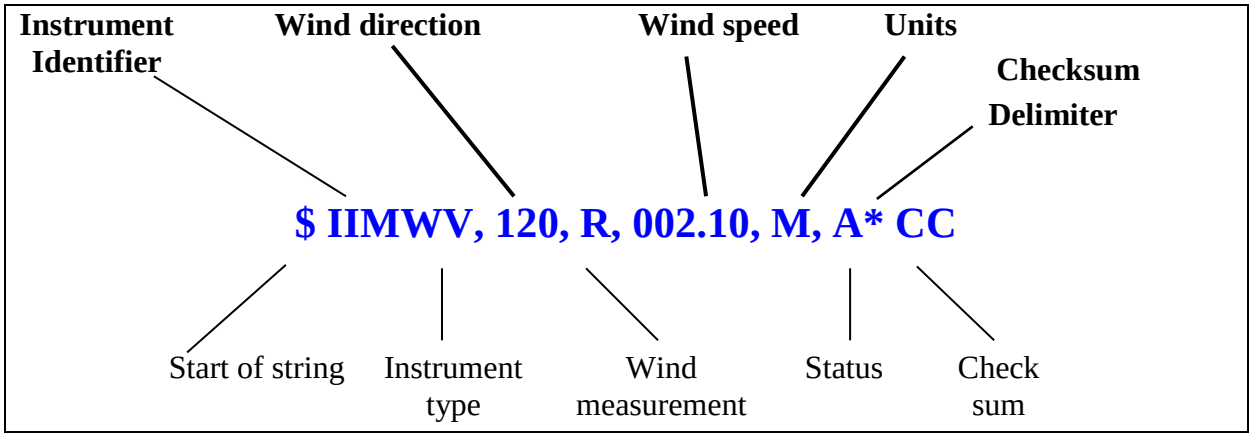

Where

Wind direction	In degrees relative to North (DDD)	
Wind speed	In increments of 0.01 units (±MMM.MM)	
Units	M	Metres per second (m/s)
	N	Knots (knots)
	P	Miles per hour (MPH)
	K	Kilometres per hour (kph)
	F	**Feet per minute (fpm)**
Start of string	$	
Instrument type	IIMWV	
Wind measurement	R	Relative wind measurement
Status	A	**A**cceptable measurement
	V	**V**oid measurement
Check sum	Exclusive OR of all characters between '$' and '*' reported as ASCII hex.	

A typical WindObserver 65 configuration suitable for NMEA would be:

B2, E1, F1, G0, K1, L1, M5, O1, P1, U1.

Consult specification NMEA 0183 version 3 (available on the web) www.nmea.org for complete interface details.

7.11. Averaging Format (Modes 14 and 15)

See also Para 7.6.2.

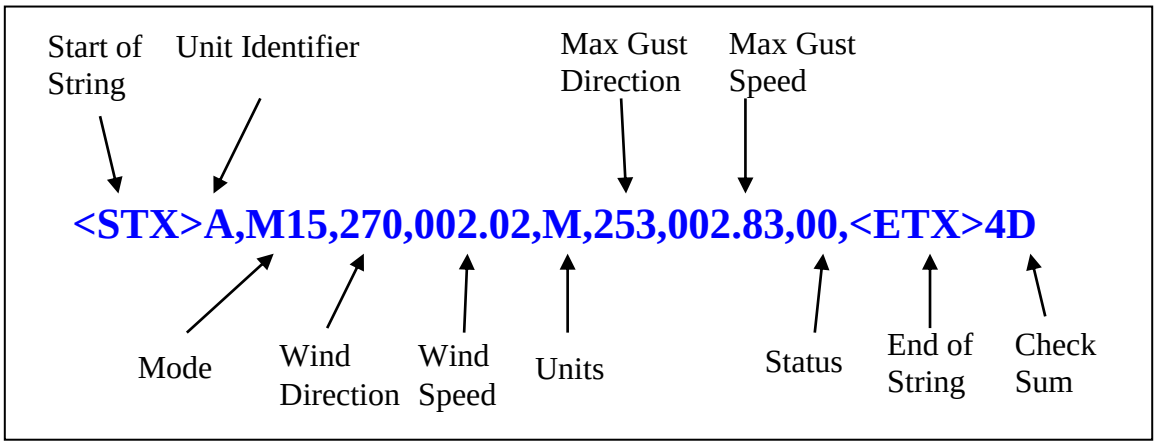

Start of string	ASCII value 2	
Unit identifier	Letter A – Z (**default A)**	
Mode	M14	Polled Averaging
	M15	Continuous Output Averaging
Wind Direction		In degrees relative to North (DDD) settable average of direction in degrees.
Wind Speed		In increments of 0.01 units (±MMM.MM), settable average of speed in m/s.
Units	M	Metres per Second
	N	Knots
	P	Miles per Hour
	K	Kilometres per Hour
	F	Feet per Minute
Max Direction Gust		In degrees relative to North (DDD)
Max Gust Speed		In increments of 0.01 units (±MMM.MM)
Status	**Value**	**Status**
	00	OK
	60	Heating enabled and OK if enabled
	51	Means that the averaging is incomplete (non-heat enabled units only).
	Any other value	Warning or fault condition - *see Section 10.5*
End of string	ASCII value 3	
Check sum	Exclusive OR of all characters between Start of String and End of String reported as ASCII hex.	

7.12. Analogue outputs and options

Analogue outputs are available as an option on the WindObserver 65.

See Section 6.5 for connection details, and Section 8.5 for configuring the analogue outputs.

Output modes

There are three analogue output channels which can be configured as either voltage (0 to 5v, or ±2.5v)**,** or current outputs (4 to 20mA). They are available simultaneously with the digital outputs.

Channel outputs

The signals on the Channel outputs 1 and 2 are dependent on the Output format chosen. The signal on Channel 3 can be configured for either Status or Temperature.

Output format	Channel 1	Channel 2	Channel 3
UV (M1, M3, or M7 (Binary))	U	V	**Status** or Temperature
Polar (**M2**, M4, or M8 (Binary))	Magnitude	Direction	
NMEA (M5)	Magnitude	Direction	
Binary Tunnel (M6)	U Speed	U direction	
Tunnel (M12)	U Speed	U Direction	
Tunnel (M13)	U Speed	U Direction	
Polar (M14, M15)	Magnitude	Direction	Status

Status

If channel 3 is configured for Status, the output will be 0v (or 4mA) if the unit is in an OK condition. In a fault condition, error code 01, 02, or 04, the output will be +5v (or 0mA).

See Section 10.5 for the list of Error Codes.

Temperature

If channel 3 is configured for Temperature, it reports the temperature if it is between –40 and +70°C, scaled from +0.7V to +5V (6.25mA to 20mA). Temperatures outside this range are reported as errors by setting the output to 0V (4mA).

Tunnel mode

In Tunnel mode, Channel 1 represents the Wind Speed along the U Axis, Channel 2 gives the direction of the wind along the U axis, where a –U vector (=wind from the ‘N’ direction) is represented by 0v (or 4mA), and a +U vector (=wind from the ‘S’ direction) by 5v (or 20mA).

Scaling

All analogue outputs are in m/s irrespective of the digital units of measurement setting and can be scaled to have a full-scale deflection of ±10 to ±70 units using the Z command.

In Polar mode the ± sign should be ignored. Only the + sign is effective.

In all cases zero Wind Speed is represented by 0V or 4mA.

Averaging

Analogue Outputs are not averaged when using the G command.

Analogue Outputs are averaged in Modes M14 and M15 (but no Gust Output).

Polar mode direction wraparound

The Wind Direction in Polar mode can be configured for either Standard (0 - 359°) or **Wraparound (0 - 539°)** options. If the Standard mode is used with a chart recorder, large swings of the recorder pen will be experienced each time the wind direction passes between 0 and 359°. Using the Wraparound mode, when the wind first changes from 0° to 359°, there will be a step change on the output, but after this first time the output will change smoothly each time the wind passes through 360°. (Similarly, the first time the wind veers from 539° to 180°, there will be a step change, after which the output will change smoothly).

Wind direction (degrees)	Voltage output (V)		Current output (mA)	
	Standard	Wraparound	Standard	Wraparound
0	0	0	4.00	4.00
180	2.5	1.67	12.00	9.33
360	5.0	3.33	20.00	14.67
540	N/a	5.0	N/a	20.00

Low wind speeds

Whilst the wind speed is below 0.05 metres/sec, the wind direction will not be calculated, all other output parameters will continue to update at the output rate.

The following Table shows Channel 1, 2 and 3 outputs with Polar Continuous, 4-20mA current outputs under various operating conditions. Status channel 3 output also shows conditions when 0-5v or ±2.5v outputs are used.

Condition	Channel 1 (Wind Speed)	Channel 2 (Wind Direction)	Channel 3 (4-20mA Status)	Channel 3 (0-5v Status)	Channel 3 (±2.5v Status)
Wind Speed, Greater Than 0.05m/s	Variable 4 to 20mA (value depends on Output scaling)	Variable 4 to 20mA (Value depends on Output scaling)	4mA (Unit functioning correctly)	0v (Unit functioning correctly)	-2.5v (Unit functioning correctly)
Wind Speed, Less Than 0.05m/s	Variable close to 4mA.	Outputs last known good/valid current reading until wind increases above 0.05m/s.	4mA (Unit functioning correctly)	0v (Unit functioning correctly)	-2.5v (Unit functioning correctly)
Any Wind Speed with Failure Codes Output 01, 02, 04 etc.	Fixed 4mA until fault clears.	Outputs last known good/valid current reading until fault clears.	0mA (Failure code present)	5v (Failure code present)	+2.5v (Failure code present)

Cables.

If using 4-20mA outputs then cable length is limited to the resistance of the connecting cable (to and from the load) plus the load resistance which all together must be less than 300 ohms.

If using 0-5v output then consider volt drops on the cable that might impact on 0v and 5v readings. A 4-20mA system will be more noise immune and capable of longer cable runs.

8. CONFIGURING

The WindObserver 65 can be configured using Terminal emulator software such as HyperTerminal.

Alternatively it is possible to use Gill Wind Software as a Terminal program only (Wizard and Sync Comms not applicable). Wind will run on PC's up to and including Windows 10 and can be downloaded from:-http://www.gillinstruments.com/main/software.html.

8.1. Configuring using HyperTerminal

Note – Other terminal emulators are configured in a very similar way.

1. Decide on an available Com port that you want to use (Usually Com1).
2. Run Hypertrm.exe.
3. Create a New Connection (File → New Connection)
4. Enter a **Name** (eg WindObserver 65) .
5. Change '**Connect Using**' to 'Direct to Com 1' (or other Com port as required)
6. Adjust the Port settings to match WindObserver settings. WindObserver default settings are :

   Bits per second 9600

   Data bits 8

   Parity None

   Stop bits 1

   Flow Control (Handshaking) None

   Click on OK and data similar to the following example will scroll on screen at the output rate:

   ☺A, 229, 002.74, M, 00, ♥ 06

8.2. Entering Configuration mode

From Continuous mode

Type *

From Polled mode

Type *N - where N is the Unit Identifier.

Note - the Unit Identifier must be entered as upper-case

The WindObserver 65 responds with a CONFIGURATION MODE message, stops reporting wind measurements, and waits for a command (as detailed below).

8.3. Returning to Measurement mode

Type Q and press ENTER

If in **Continuous** mode, the anemometer responds with wind measurements immediately, continuing at the selected Sampling rate.

If in **Polled** mode,

?	Enables poll
N	Polls anemometer (where N is the Unit identifier entered as upper-case)
	The anemometer replies with a single set of wind measurements
&	Anemometer replies with Unit identifier
!	Disables poll

Note:- If the unit is in Polled Mode it is always best to interrogate the unit for data with a ? before the poll identifier to cater for the event that the power has been switched off or power interrupted.

If used in a multi drop system then it is recommended that Unit Identifiers A, B, C, D, E, F, K, M, N and P are not used.

8.4. Checking the configuration

We strongly recommend that, as a standard procedure, you use this command (D3) prior to, and after, changing any settings. It shows the current settings for all the alterable settings. We suggest you note down your settings, so that you can easily return to them.

Type * Enters Configuration Mode (from Continuous mode)

Or Type *N Enters Configuration Mode (from Polled mode)

Type D3 and press ENTER The WindObserver 65 responds with the current configuration settings.

The factory default settings for a heated unit are: -

A0 B3 C1 E1 F1 G0000 H2 J1 K1 L1 M2 NA O1 P1 T1 U1 V1 X1 Y1 Z1

Or factory default settings for an unheated Unit are:-

A0 B3 C1 E1 F1 G0000 J1 K1 L1 M2 NA O1 P1 T1 U1 V1 X1 Y1 Z1

To return to Measurement mode Type Q and press ENTER

How to change these settings is explained in the following sections.

8.5. Changing settings

To change a setting, first go into Configuration mode and then refer to the sections below. Enter the Configuration code of the new setting required, followed by ENTER.
If successful, the new setting will be echoed back as a message by the WindObserver 65.

For example, to change the message format to NMEA, Type M5 and press ENTER .
The WindObserver 65 will reply with M5. When the unit is returned to the Measurement mode Type Q and press ENTER, it will be in NMEA format.

Note: The factory-set (default) settings are shown in **bold** in the following sections.

8.6. Configuration Settings

Ax - Speed of Sound (SOS) and Temperature

Setting	Configuration code
Disable both	**A0**
Report SOS	A1
Report Sonic temperature	A2
Report SOS and Sonic temperature	A3

Note that neither of these parameters is available in Tunnel or NMEA formats.

Bx - Baud Rate

Setting	Configuration code
2400	B1
4800	B2
9600	**B3**
19200	B4
38400	B5
1200	B6

To change the Baud rate when using HyperTerminal: -

Eg. If set to B3 (9600 baud) and it is required to set to Baud rate to B2 (4800 baud).

Type * to enter Configuration Mode.

Type B 2 and press ENTER, **(Do not type any further commands at this stage).**

Close the 9600 Baud HyperTerminal connection.

Open HyperTerminal and set the new connection Baud Rate to 4800 baud.

Type B and press ENTER, the letter B will be shown followed by B2

Type Q and press ENTER, data will scroll at the new baud rate.

Cx- Analogue Output Polar Mode Direction Wraparound

Setting	Configuration code
Wraparound (0 - 539°)	**C1**
Standard (0-360°)	C2

Dx- Diagnostic and Configuration Command (see also Section 10.6)

Each of these commands causes a response from the WindObserver 65.

Item	Command code	Typical response
Type and serial No.	D1	***12400001 (**where * = E (Unheated unit), F = (Heated unit)
Software version	D2	6.01
Unit configuration	D3	Current configuration: A0 B3 C1 E1 F1 G0000 H2 J1 K1 L1 M2 NA O1 P1 T1 U1 V1 X1 Y1 Z1
Analogue ID (if present)	D4	Analogue Active (if fitted) or No analogue fitted.
Anemometer power supply voltage	D5	+29.8
Integrity check	D6	See Para 10.6 Bench Tests

Ex - Full Duplex/Half Duplex Mode

Setting	Configuration code
Full duplex	**E1**
Half duplex	E2

Note: - Refer also to Para 8.3 Networking Configuration details.

Fx- Data and Parity Options

Setting	Configuration code
8 bits, no parity, 1 stop bit	**F1**
8 bits, even parity, 1 stop bit	F2
8 bits, odd parity, 1 stop bit	F3

Note: If changing to F2, using a terminal program then when in configuration mode Type F2 and press Enter, close the terminal program and open a new one with F2 Even parity settings, then type F and press Enter.

Gx to Gxxxx - Averaging (Digital Outputs only)

Setting	Configuration code
Averaging (Default)	**G0000**

Enter the required averaging period in seconds as a four-figure number between 0000 and 3600.

Hx - Heating (If fitted)

Heating is autonomous and requires no set-up once activated.

Setting	Configuration code
Disabled	H1
Activated	**H2**

Jx - Analogue Power-up Tests

Setting	Configuration code
Disable analogue power-up tests on switch on	J0
Enable single analogue power-up test on Switch on	**J1**
Enable continual cycling of analogue power-up tests	J2
Disable continual cycling of analogue power-up tests	J3

Analogue Power up tests cycle: -

Analogue Output Voltage connections between 0v, 1.25v, 2.5v, 3.75v and 5v.

Analogue Output Current connections between 0mA, 5mA, 10mA, 15mA and 20mA

Kx – NMEA Settings

Setting	Configuration code
NMEA string "IIMWV"	**K1**
NMEA string "WIMWV"	K2

Lx - ASCII Message Terminator

Setting	Configuration code
CR LF	**L1**
LF	L2

Mx to Mxx - Message Format

Output format	Configuration code
ASCII UV Continuous	M1
ASCII Polar Continuous	**M2**
ASCII UV Polled (tri-state) *	M3
ASCII Polar Polled (tri-state) *	M4
NMEA Continuous	M5
Binary Tunnel Continuous	M6
Binary UV Continuous	M7
Binary Polar Continuous	M8
ASCII Tunnel Continuous	M12
ASCII Tunnel Polled (tri-state) *	M13
ASCII Polar Polled Averaged	M14
ASCII Polar Continuous Averaged	M15

* If units are to be networked, they MUST be given unique Unit Identifiers

Nx – Unit Identifier Address

Item	Options	Command
Unit Identifier Address	**A… -**(A to Z)	**N<A>**

If used in a multi-drop system then it is recommended that ID's A to F and K, M, N and P are not used, as these characters can be present in the data string.

Ox – ASCII Output Format (Output String Padding)

Setting	Configuration code
Comma Separated Variable (CSV)	**O1**
Fixed Field	O2

Example data strings:-

POLAR	NMEA
CSV data changing to error status code condition.	**CSV** data changing to error status code condition**.**
A,235,000.77,M,00, 0A	$IIMWV,191,R,000.55,M,A*19
A,,,M,04, 24	$IIMWV,,R,,M,V*29
Fixed Field data changing to error status code condition.	**Fixed Field** data changing to error status code condition.
A,266,000.73,M,00, 08	$IIMWV,191,R,000.55,M,A*19
A,999,999.99,M,04, 0A	$IIMWV,999,R,999.99,M,V*07

Px - Output Rate

Outputs per second	**1**	2	4	5	8	10
Configuration code	**P1**	P3	P2	P4	P5	P6

Q- Measurement Mode

See Section 8.3.

RWASHORT XX (Short term number)
Where XX = 10 to 60, associated with Mode 14 and Mode 15 averaging.

RWALONG XX (Long term number)
Where XX = 1 to 10, associated with Mode 14 and Mode 15 averaging.

Tx - Analogue Output Voltage or Current settings (if fitted)

Setting	Configuration code
Voltage (0 to 5V)	**T1**
Voltage (–2.5V to +2.5V)	T2
Current (4-20mA)	T3

Ux – Digital Output Units

Units	**metres/sec (m/s)**	knots (knots)	miles / hour (MPH)	kilometre/hour (kph)	feet / minute (fpm)
Configuration code	**U1**	U2	U3	U4	U5

Vx- Vertical Output Padding

Setting	Configuration code
Disable vertical output padding	V1
Enable vertical output padding	V2

Xx - 45° Alignment Offset/Inverted Operation

Setting	Configuration code	Notes
Align U axis with transducer axis	X1	**X1. Aligns U axis with North/South axis.**
Align U axis +45° to transducer axis	X2	X2. This re-aligns both U&V and polarity 45˚ to transducer axis.
Reverses Polar Direction	X3	X3 reverses reported polar direction to allow the instrument to be mounted upside down. N.B. Does NOT affect UV alignment (Mode 1, 3).
Align @ 45° from North	X4	X4 set polar alignment at 45 degrees from North when instrument is mounted upside down. Does NOT affect UV alignment (Mode 1, 3).

Figure 4 shows the polarity of U and V if the wind components along the U and V axis are blowing in the direction of the respective arrows.

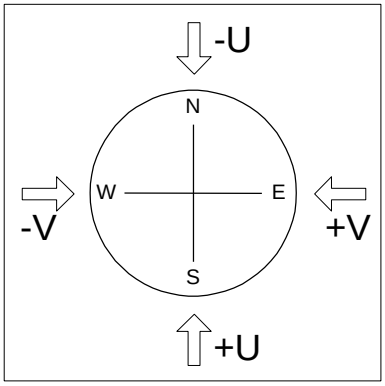

Figure 4 UV Polarity

Yx – Analogue Output, Channel 3 (if fitted).

Setting	Configuration code
Status	Y1
Temperature	Y2

Zx – Analogue Output Scaling (if analogue outputs fitted).

Setting	± 10	±20	±30	±40	±50	±60	±70
Configuration code	Z1	Z2	Z3	Z4	Z5	Z6	Z7

9. VIEW AND LOG DATA WITH WINDVIEW SOFTWARE

9.1. Introduction

Gill WindView Software can be downloaded from
http://gillinstruments.com/main/software.html
Gill Wind View will run on PC's with Windows XP onwards operating systems.

9.2. Connect to an Instrument using Gill WindView Software

Open WindView Software.

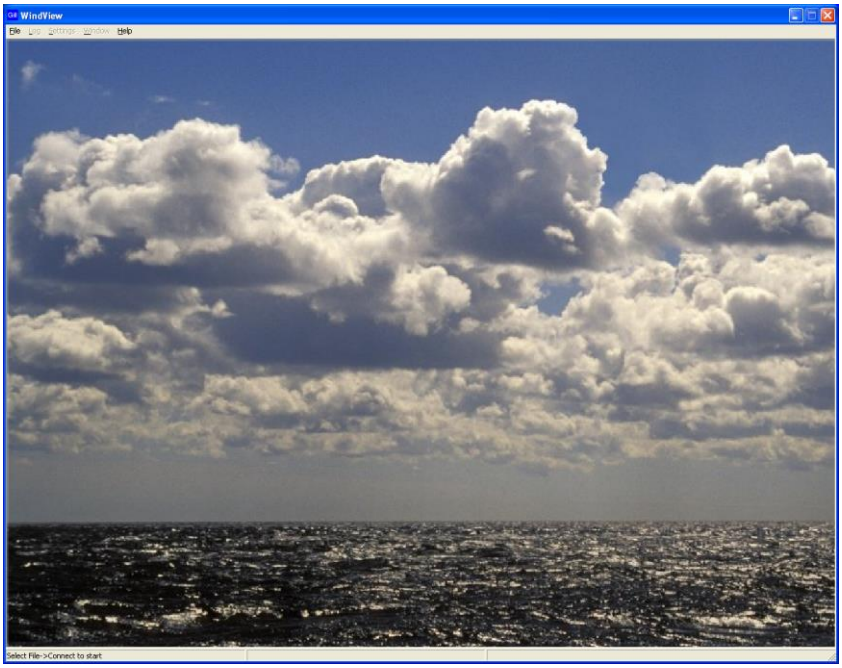

Select File/Connect.

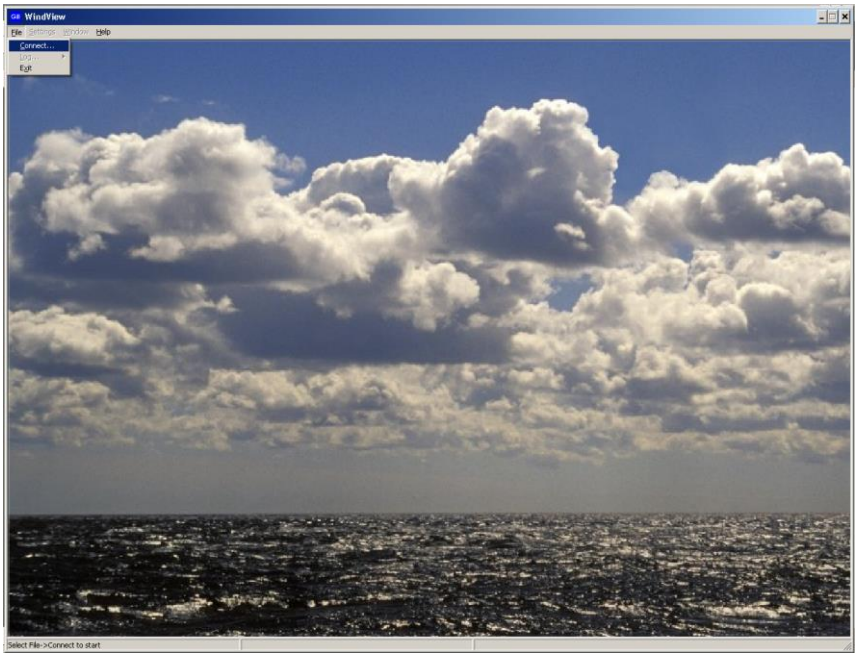

The default connection name is Anemometer 1, it can be re-named if required.

Select the Output Format to match the Sensor format i.e. the WindObserver default format is Gill Polar (2 axis).

If the WindObserver were set for UV or NMEA output then choose the appropriate format setting from the drop down menu.

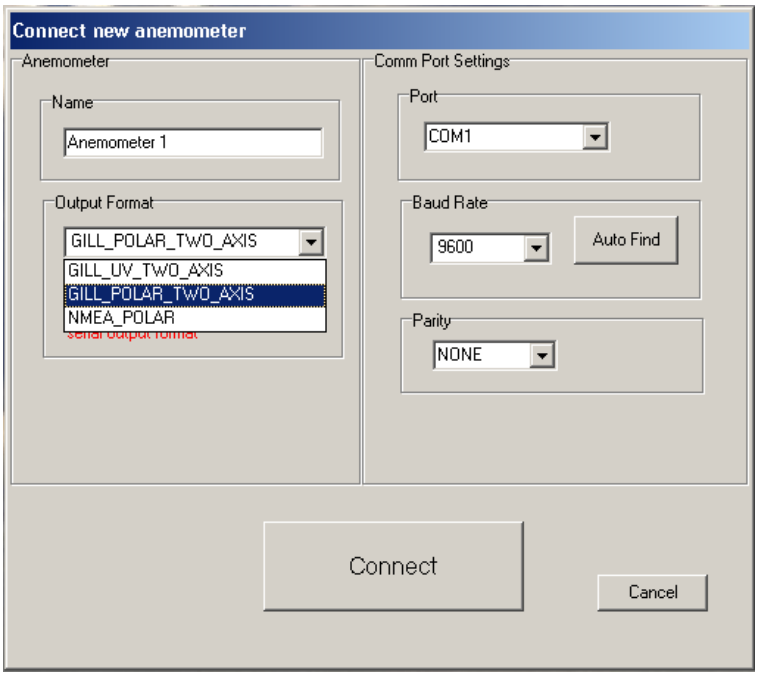

From the Port drop down menu select the PC COM Port to which the WindObserver is connected to e.g. COM 9.

Select the Baud rate setting from the drop down menu to match that of the Windobserver, the WindObserver default baud rate is 9600 baud.

Leave Parity setting at None.

Click on Connect.

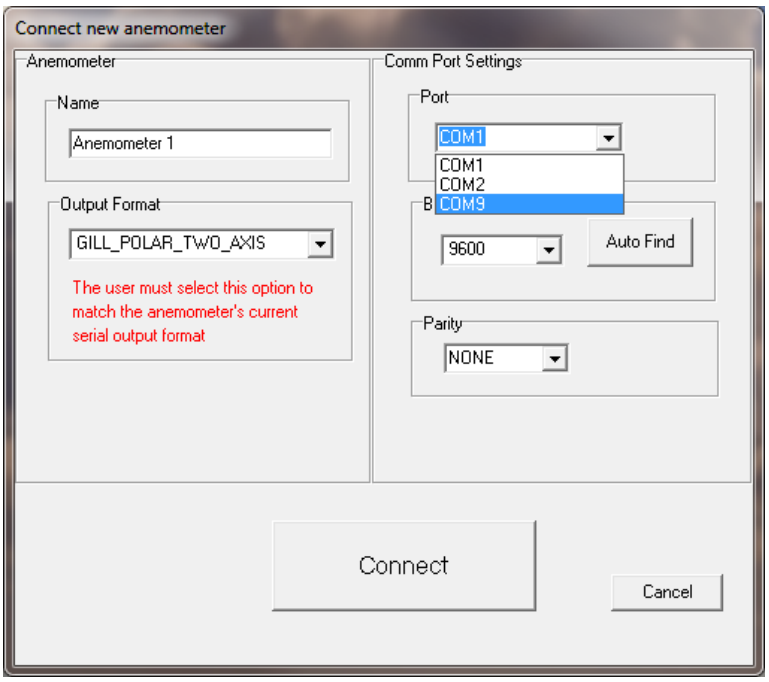

The Data button screen will show the WindObserver data scrolling on screen updated at the WindObserver Output rate.

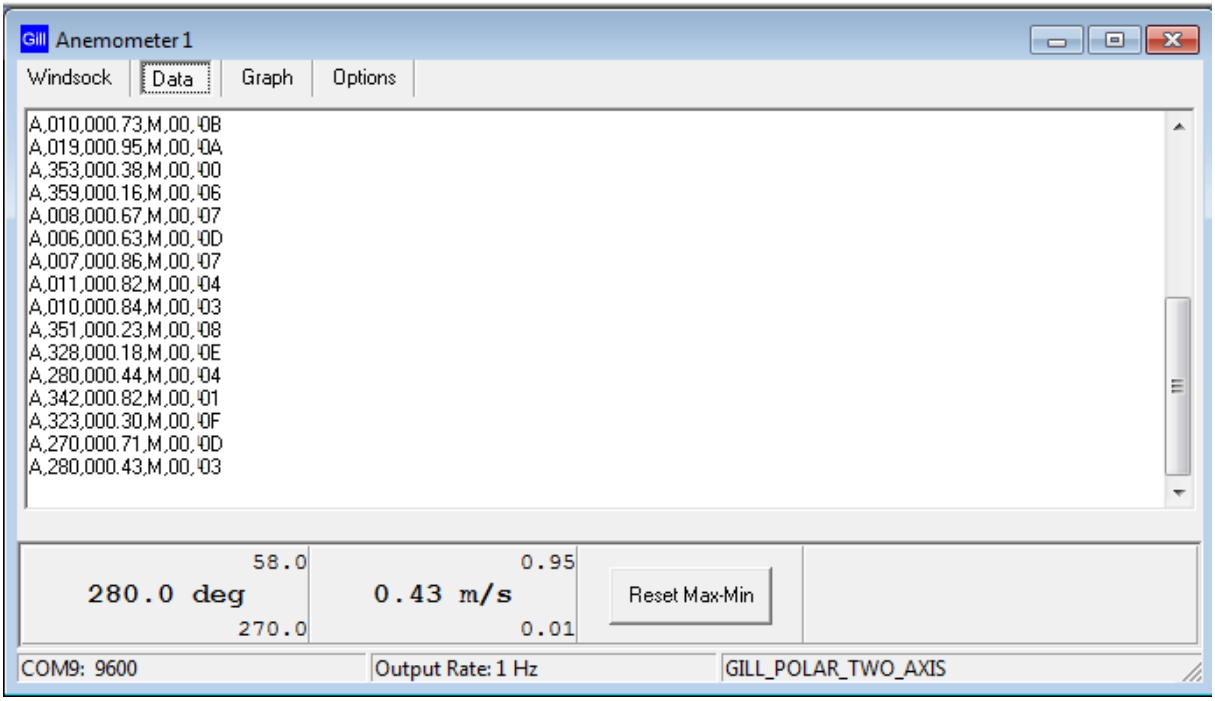

9.3. WindSock Function

Click on the WindSock button to give a Direction display and digital readout of Direction and Wind Speed:-
On screen Maximum and Minimum readings of Wind speed and Directions are also displayed digitally and can be reset using the Reset Max/Min button.

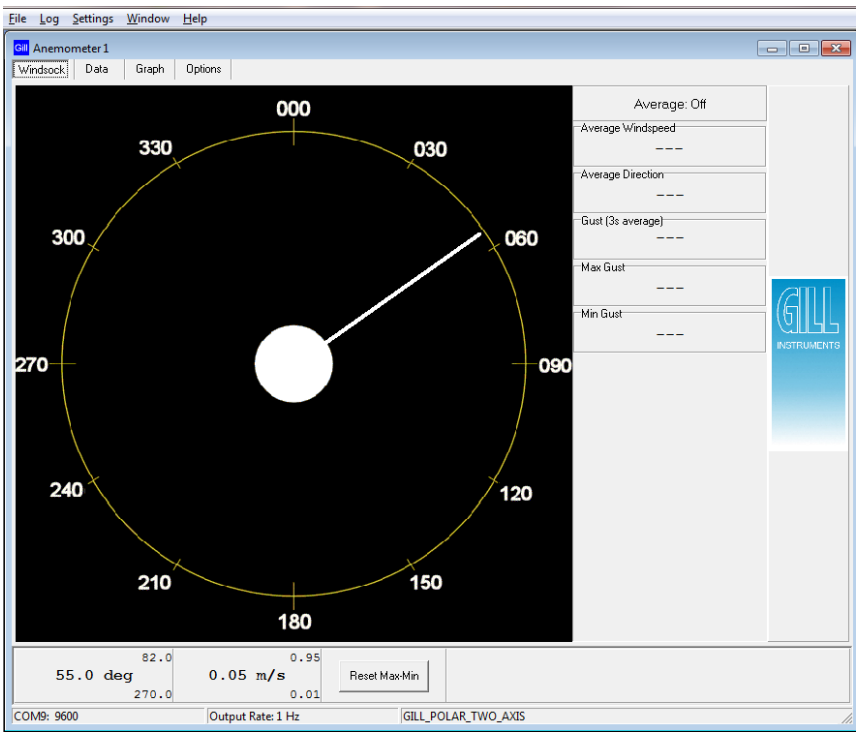

9.4. Logging Data.

To Log WindObserver data, from the WindView top menu select Settings/Logging.
If Segmented log files are required tick the Enable box and select the length of each log file.
Tick the Record Formatting box options for Appending PC Time and Date Stamp and sequential line numbering as required.
Date and Time are taken from the PC clock.
The Log Description box allows a free text file header to be added to the log file.
Save the Log file to the required Directory.

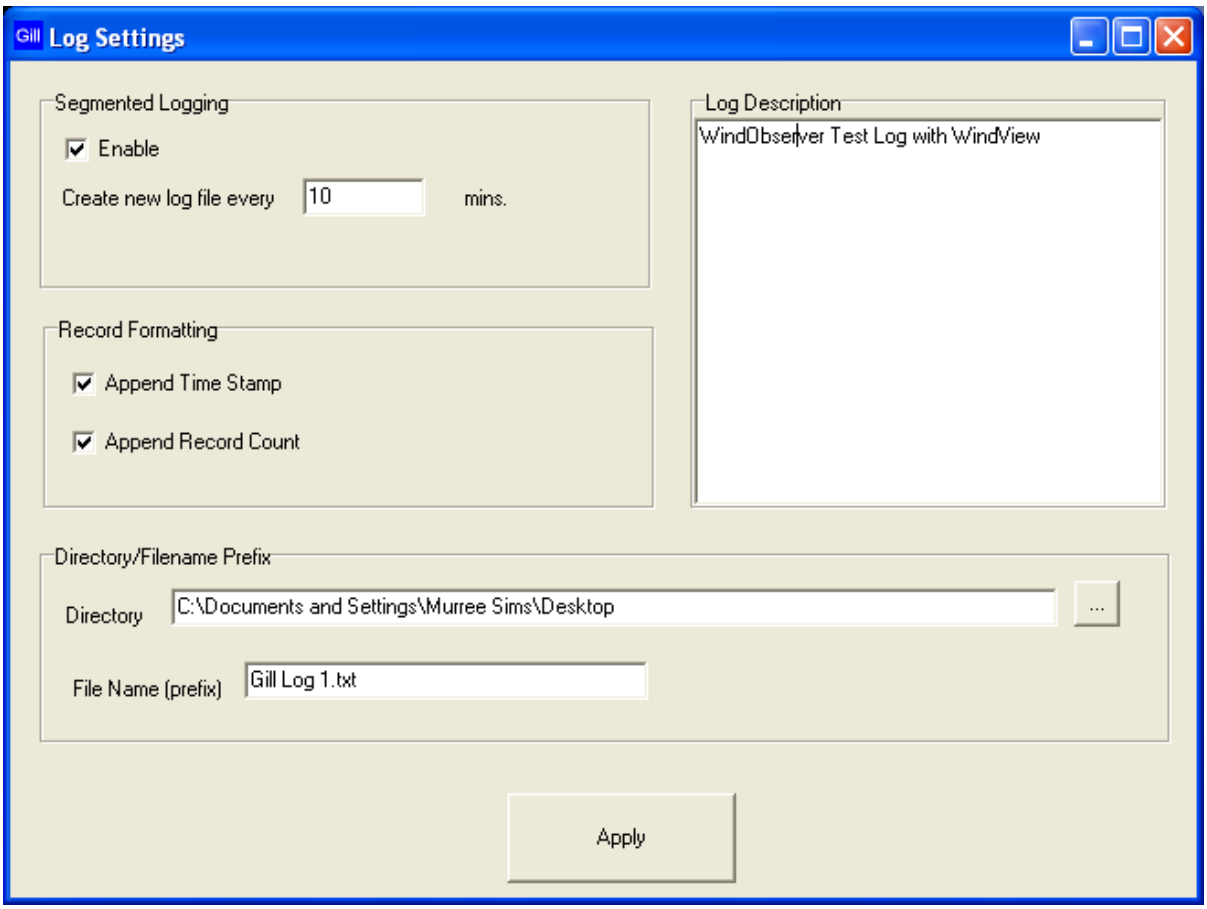

Click on Apply gives the following screen, click on OK:-

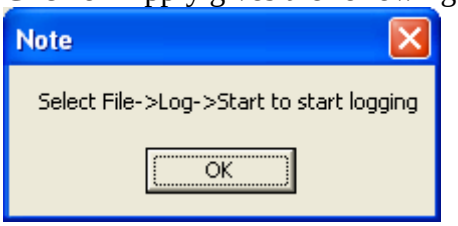

<u>To Start Logging.</u>
From the top menu select Log.
Click on Log/Start to commence logging.

<u>To Stop Logging.</u>
From the top menu select Log.
Click on Log/Stop to stop logging.

The logged data is saved to a PC text file that can be opened with Notepad or equivalent and the following example illustrates the saved time/date stamped WindObserver data.
Note: The Data and time information are taken from the PC Clock.

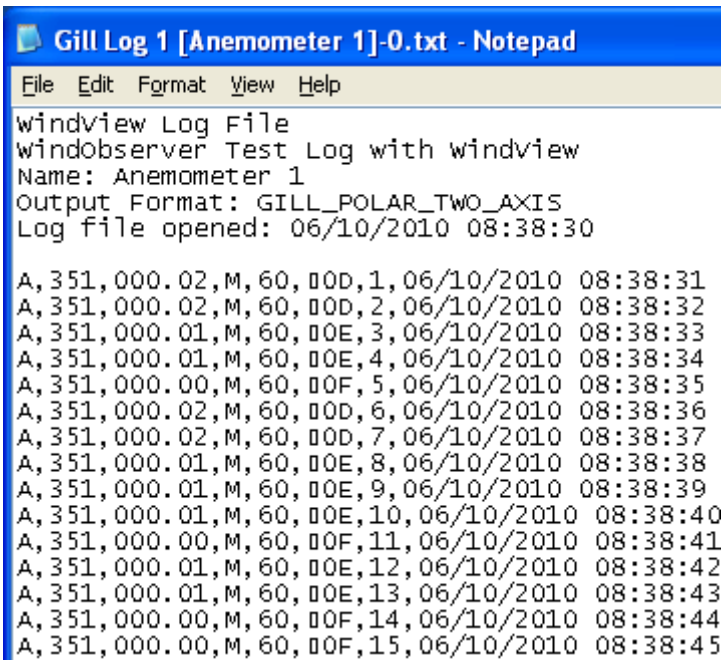

The logged Wind Data .txt file can be imported into Microsoft Excel if it is required to manipulate the data or graph plot the data.

10. MAINTENANCE & FAULT-FINDING

10.1. Cleaning and Handling

When installing the unit handle with lint free gloves and degrease the unit to reduce the build-up of deposits.

If there is any build-up of deposit on the unit, it should be gently cleaned with a cloth, moistened with soft detergent. Solvents should not be used, and care should be taken to avoid scratching any surfaces. The unit must be allowed to defrost naturally after being exposed to snow or icy conditions, do NOT attempt to remove ice or snow with a tool.

Do NOT remove black "rubber" transducer caps.

10.2. Servicing

There are no moving parts or user-serviceable parts requiring routine maintenance.

Opening the unit or breaking the security seal will void the warranty and the calibration.

In the event of failure, prior to returning the unit to your authorised Gill distributor, it is recommended that:

- All cables and connectors are checked for continuity, bad contacts, corrosion etc.
- A bench test is carried out as described in Section 10.6.
- Contact your supplier for advice if failure persists.

10.3. Fault-finding

Symptom	Solution
No output	Check DC power to WindObserver 65, cable and connections. Check comms settings of WindObserver 65 (as detailed in Section 8) and host system match, including correct Com port. Check unit is in Continuous mode. Check that in-line communication devices are wired correctly. NOTE: It is usual for Anemometer TX + to be connected to converter device RX +.
Corrupted output	Check comms settings of WindObserver 65 and host system match. Try a slower baud rate. Check cable lengths and type of cable.
One way communication	Check wiring is in accordance with the manual.
Failed / Incorrect WindObserver 65 output, data invalid flag	Check that transducer path is not blocked.

10.4. Safe Mode

If a unit is received that will not communicate or the configuration settings are not known then Safe Mode can be used to establish communication with the WindObserver 65 and change configuration settings.

Initial Set Up.

The WindObserver 65 RS422 Pair 1 and Pair 2 TX and RX output connections (4 wires) are connected to a PC via an RS422 to RS232/USB Converter.

Open a Terminal program e.g. Windows HyperTerminal (or use Gill Wind Software as a Terminal program).

Select the required COM port.

Set the Baud rate to 19200 baud (if using the Wind Terminal program it opens at 19200 baud).

To Place the unit into Safe Mode.

Turn off the WindObserver 65.

Ensure the Terminal program is set for 19200 baud,

Hold down the PC keyboard * key and turn on the WindObserver 65 Power Supply.

The words SAFE MODE should appear on the terminal screen.

If not then power down the WindObserver 65, hold the * key and re-power sensor.

To now check the unit: -

Type D1 and press Enter, to see serial number.

Type D2 and Press Enter to see Firmware version.

Type D3 to see configuration settings,

```
SAFE MODE
D1
F922036
D1
D2
5.00
D2
D3
current configuration :
A0 B2 C1 E1 F1 G0000 H2 J1 K1 L1 M5 NA O2 P1 T1 U1 V1 X1 Y1 Z1
```

Change settings if required.

Type Q and press Enter to go back into measurement mode.

If powering down the instrument and repowering and no change has been made to the baud rate (B command) then open a new terminal program at the units original baud rate setting (the default setting would be 9600 Bauds).

10.5. Status (error) codes

The Status code is sent as part of each wind measurement message.

Note: Status Codes 60 to 65 are only applicable to a unit with the heating option.

Code	Status	Condition
00	**OK**	**Sufficient samples in average period**
60	**OK and heating enabled**	**Sufficient samples in average period**
A	**OK**	**NMEA data Acceptable**
01	Axis 1 failed	Insufficient samples in average period on U axis
02	Axis 2 failed	Insufficient samples in average period on V axis
04	Axis 1 and 2 failed	Insufficient samples in average period on both axes
08	NVM error	NVM checksum failed, data could be uncalibrated.
09	ROM error	ROM checksum failed, data could be uncalibrated.
51	Measurement average building.	Data valid but warns that average period not reached when averaging used (non-heat enabled units only).
62	Heating current tripped or electronic failure,	Valid data still output
63	Heater Thermistor open circuit	Valid data still output.
65	Heating element open circuit	Valid data still output, Heater Element or Heater PSU has dropped out/failed
V	NMEA data Void	Invalid data output

10.6. Bench Test

Data Tests

1. Couple the WindObserver 65 to the host system and power supply, using a known working test cable.
2. Check that the unit is correctly configured by going into Configuration mode and using D3 *See Section 8.4 Checking the Configuration.*
3. Check for normal output data, and that the Status Code is OK – 00, 60 or A (for NMEA format).
4. If the status code is other than these, refer to Section 10.5 Status (error) codes.
5. Use an office fan or similar to check that the unit is sensing wind, turning the unit to simulate changing wind direction and to check that both axes are functioning.
6. Note that this is a quick functional test. There are no calibration adjustments; the unit is designed NOT to require re-calibration within its lifetime. Gill has provided and Integrity Check, see next page for details.

Use of an Integrity Check Chamber (Optional item)

The ICC is designed to:

1. Identify any gross changes in the head geometry that would affect the performance.
2. Provide a zero wind environment to confirm the WindObserver 65 zero calibration.

The ICC has been designed to be used in an indoor still air environment with an ambient temperature between 17°C and 23°C. When conducting the test it is important that the ICC is assembled on to the WindObserver 65 head and not touched or moved during the test.

This test is only valid if undertaken with an ICC purchased from Gill.

Note:- The Heater supply should be disconnected or turned off when using the ICC.

Zero Wind Check

Configure your PC to run HyperTerminal and assemble the ICC by inserting the reflector cases and the two halves of the ICC onto the WindObserver 65. The ICC must be retained using the strips provided. Then:

1. Ensure that the WindObserver 65 is set in factory default mode. For Factory default settings see section 8.4.
2. Enter Measurement Mode and Record/View data

In still air wind speed measurements should not exceed 0.03m/s. If wind speed exceeds 0.03m/s contact Gill Instruments.

Alignment Check

Ensure the ICC is assembled correctly on the WindObserver 65. Using HyperTerminal, enter Configuration Mode as described in Section 8.

Enter D6.

A typical report as shown below will be displayed.

```
D6
ALIGMENT LIMITS: U=2424,2524
                 V=2434,2434
ALIGNMENT U:2474 *PASS*
ALIGNMENT V:2484 *PASS*
D6
```

If ‘Refer to Manual’ is shown check test temperature conditions are 17 to 23 deg C and tested under zero wind condition.

If there has been no significant changes to The WindObserver 65 head configuration then *PASS* will confirm correct operation.

Alterations to the head geometry can result in a *FAIL* or ‘Insufficient Samples’ message. If this occurs please contact Gill Instruments.

10.7. Returning Units

If the unit has to be returned, it should be carefully packed in the original packaging and returned to your authorised Gill distributor, with a full description of the fault condition.

11. APPENDICES

11.1. Glossary & Abbreviations

Item	Meaning
CAL	Calibration
CR	Carriage Return
CRLF	Carriage Return Line Feed
CSV	Comma Separated Variable
ENG	Engineering
ESC	ESCape key on keyboard used to stop any process that is being executed
ETX	End of string character
FAC	Factory
fpm	Feet per minute
GND	GrouND
HEX	HEXadecimal
I/P	InPut
IP66	Protection Classification
KPH	Kilometres per Hour
LF	Line Feed
m/s	Metres per second
MAG	MAGnitude - scalar reference to wind speed
MAX	MAXimum
MPH	Miles per Hour
NEMA	National Electrical Manufacturers Association
NMEA 0183 (version 3)	National Marine Electronics Association standard for interfacing marine electronic navigational devices
No:	Number
NVM	Non-Volatile Memory
O/P	Output
PC	IBM compatible Personal Computer
PCB	Printed Circuit Board
POR	Power On Reset
ROM	Read Only Memory
RS232	Communications standard

Item	Meaning
RS422	Communications standard
RS485	Communications standard
RTS	Request To Send
RWA	Road Weather Averaging
RX	Receive
RXD	Received Data
S/W	SoftWare
SOS	Speed Of Sound
SEC	SECond
STX	Start of string character
TERM	TERMinal
TX	Transmit
TXD	Transmitted Data
+VE	Positive
-VE	Negative
WRT	With Respect To

11.2. Guarantee

For terms of guarantee contact your supplier or refer to the Gill Instruments Terms & Conditions here:

https://gill.group/wp-content/uploads/Gill-Group-Company-Terms-Conditions-of-Sale-9170-0003-Issue-02-March-20.._.pdf

Warranty is void if the green security seal covering base nuts is damaged or broken, or the transducer caps have been damaged.

11.3. FCC

WindObserver 65 complies with part 15 of the RCC Rules. Operation is subject to the following two conditions:-

(1) This device may not cause harmful interference, and

(2) This device must accept any interference received, including interference that may cause undesired operation.

This equipment has been tested and found to comply with the limits for a Class A digital device, pursuant to part 15 of the FCC Rules. These limits are designed to provide reasonable protection against harmful interference when the equipment is operated in a commercial environment. This equipment generates, uses, and can radiate radio frequency energy and, if not installed and used in accordance with the instruction manual, may cause harmful interference to radio communications. Operation of this equipment in a residential area is likely to cause harmful interference in which case the user will be required to correct the interference at his own expense.

11.4. Principle of operation

The WindObserver 65 measures the times taken for an ultrasonic pulse of sound to travel from the North transducer to the South transducer, and compares it with the time for a pulse to travel from S to N transducer. Likewise times are compared between West and East, and E and W transducer.
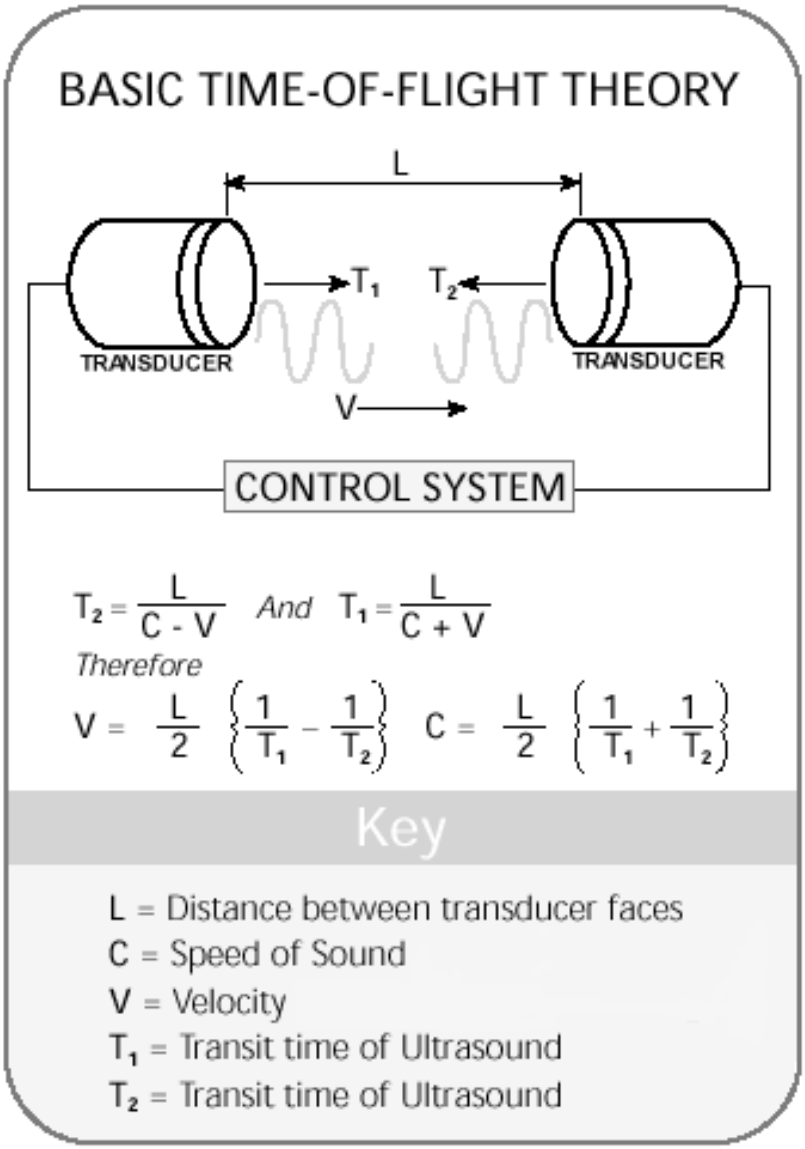
If, for example, a North wind is blowing, then the time taken for the pulse to travel from N to S will be faster than from S to N, whereas the W to E, and E to W times will be the same. The wind speed and direction (and the speed of sound) can then be calculated from the differences in the times of flight on each axis. This calculation is independent of factors such as temperature.